PF7100-7300

Industrial Axial Wall Fan

MoffittCorp.com | (800) 474-3267
1351 13th Ave S. Suite 130
Jacksonville Beach, FL 32250

MOFFITT CORPORATION
NATURAL VENTILATION SOLUTIONS

PF7100-7300 Table of Contents

PF7100-7300 Table of Contents 1
PF7100-7300 Side Wall Propeller Fans Product Details 2
PF7100-7300 Series Supply Fan Submittal data 3
PF7100-7300 Series Exhaust Fan Submittal Data 4
PF7100-7300 Series Belt Drive Exhaust and Supply Fan Panels Level 1 Construction Submittal Data 5
PF7100-7300 Series Belt Drive Exhaust and Supply Fan Panels Level 2 Construction Submittal Data 6
PF7100-7300 Series Belt Drive Exhaust and Supply Fan Panels Level 3 Construction Submittal Data 7
PF7100-7300 Series Direct Drive Exhaust and Supply Fan Panels Submittal Data 8
PF7100-7300 Industrial Axial Wall Fans Series Fan Dimensions 9
PF7100-7300 Series Wall Box 10
PF7300 Safety Guard 11
PF7300 Series Wall Collar or Front Guard 12
PF7300 Series Wall Collar or Front Guard cont. 13
PF7000–7300 Rain Hood – Supply 14
PF7000 Series 90° Rain Hood – Picture & Assembly Diagram 15
PF7100-7300 Filtered Wall Housing Sidewall Propeller Fans 16
PF7100-7300 Series Damper Submittal Data - Back Draft damper 17
PF7100-7300 Series Damper Submittal Data - Center Pivot Motorized 18
PF7100-7300 Series Assembly Instructions for Wall Box/Housing 19
PF7100-7300 Quick Ship Options 20
PF7100 Direct Drive Performance Data 21
PF7100 Direct Drive Performance Data cont. 22
PF7320 Direct Drive Performance Data 23
PF7324 Belt Drive Performance Data 24
PF7330 Belt Drive Performance Data 25
PF7330 Belt Drive Performance Data cont. 26
PF7336 Belt Drive Performance Data 27
PF7342 Belt Drive Performance Data 28
PF7348 Belt Drive Performance Data 29
PF7354 Belt Drive Performance Data 30
PF7360 Belt Drive Performance Data 31
PF7372 Belt Drive Performance Data 32
PF7100 Direct Drive Axial Wall Fan Guide Specification 33
PF7300 Belt Drive - Level 1 Axial Wall Fan Guide Specification 34
PF7300 Belt Drive - Level 2 Axial Wall Fan Guide Specification 35
PF7300 Belt Drive - Level 3 Axial Wall Fan Guide Specification 36

PF7100-7300 Side Wall Propeller Fans Product Details

PRODUCT DESCRIPTION

Moffitt Corporation industrial axial wall fans are extremely popular for general building ventilation. Their versatility provides great application diversity. Fans are used in both industrial and commercial applications, and can be orientated for either supply or exhaust applications. Units are excellent for providing worker comfort, and spot cooling when used in the supply mode. Numerous optional features offer you flexibility unmatched by any other fan supplier.

PF7100 Sidewall Propeller Fan - Direct Drive
PF7300 Sidewall Propeller Fan - Belt Drive

STANDARD FEATURES

- Size/Diameter: 12” - 120”
- CFM Range: 500 – 100,000 +
- 7300 Series - Belt Drive
- 7100 Series - Direct Drive
- Direct Drive RPM’s of 1800, 1200, 900 or 700
- All Galvanized Steel Construction
- Propeller: Aluminum
- Motor: Open Drip Proof
- Complete Operation & Maintenance instructions along with assembly drawings, supplied with fan shipment

OPTIONAL FEATURES

- Structure:
  - Wall Housing
  - Wall Collar
- Construction
  - Stainless Steel
  - Aluminum
- Propeller- FRP Blades with Cast Aluminum Hub
- Reversible orientation
- Inlet / Outlet Guard: ½” mesh, 19ga galvanized
- Polypro Impeller with Cast Aluminum Hub
- Rain hood – 90°Supply, 45° Exhaust
- Damper
  - Automatic Back draft
  - Motorized 115v/1ph PO/SC
- Disconnect Switch
- Coatings
  - Epoxy
  - Heresite
  - Coal Tar
- 100va Transformer (110/220/440)
- Diffuser
- Unit Wiring
- Silencer

INDUSTRY APPLICATION

- Steel Plants
- Aluminum Plants
- Glass Plants
- Power Plants
- General Manufacturing
- Chemical Plants
- Mine Processing Plants
- Warehouses
- Pulp and Paper Plants
- Gypsum Wallboard Plants
- Plastics Plants

PF7100-7300 Series Supply Fan Submittal data

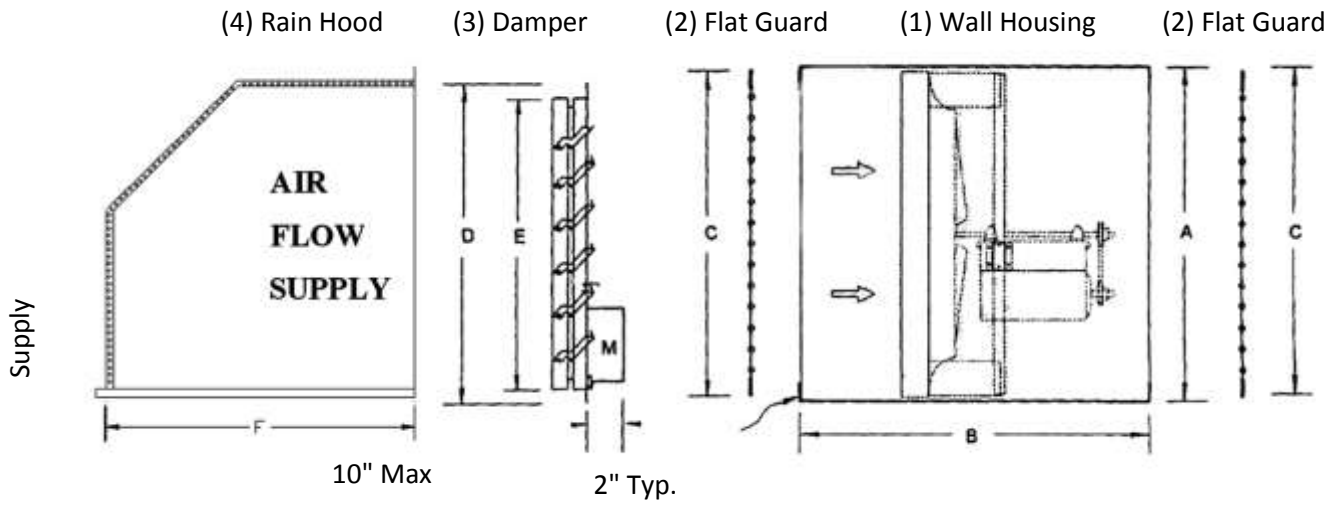

Rain hood recommended for supply applications

FAN SIZE	(1) WALL HOUSING A (SQ) O.D.	B LENGTH	MIN. WALL OPENING (SQ)	FLAT GUARD (2) C (SQ)	DAMPER (3) D (O.D.)	E	RAINHOOD (4) F
20	25		25 1/2	24	22 1/2	20	27 3/4
24	31		31 1/2	30	28 1/2	26	38 1/2
30	37		37 1/2	36	34 1/2	32	44 1/2
36	43		43 1/2	42	40 1/2	38	49
42	49	44	49 1/2	48	46 1/2	44	56 1/2
48	55		55 1/2	54	52 1/2	50	62 1/2
54	61		61 1/2	60	58 1/2	56	73
60	67		67 1/2	66	64 1/2	62	73
72	81		81 1/2	80	78 1/2	76	73

Allspecifications are subject to change without notice unless approved in submittal by Moffitt Corporation, Inc.

PF7100-7300 Series Exhaust Fan Submittal Data

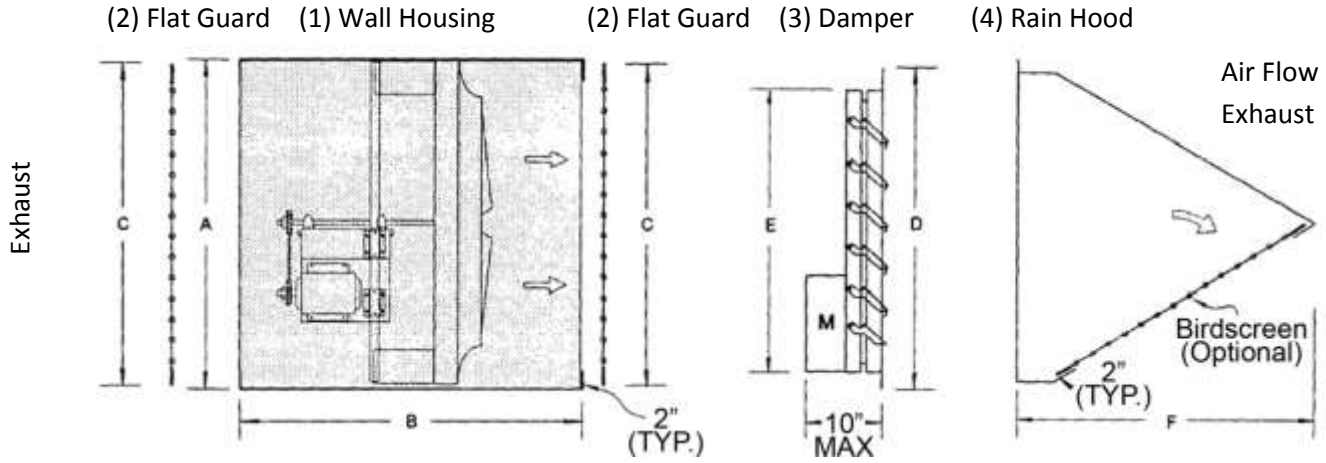

NOTE: (1)-44" long wall housing required when optional motorized damper is selected

FAN SIZE	A (SQ) O.D.	(1) WALL HOUSING B LENGTH EXHAUST LEVEL 1	EXHAUST LEVELS 2 & 3	SUPPLY LEVEL 1	SUPPLY LEVELS 2 & 3	MIN. WALL OPENING (SQ)	FLAT GUARD (2) C (SQ)	DAMPER (3) D (O.D.)	DAMPER (3) E	RAINHOOD (4) F
20	25	32 See Note (1)	44	44	44	25 1/2	24	22 1/2	20	24 1/4
24	31					31 1/2	30	28 1/2	26	28 1/2
30	37					37 1/2	36	34 1/2	32	34 1/2
36	43					43 1/2	42	40 1/2	38	40 1/2
42	49	44				49 1/2	48	46 1/2	44	46 1/2
48	55					55 1/2	54	52 1/2	50	49 1/2
54	61					61 1/2	60	58 1/2	56	58 1/2
60	67					67 1/2	66	64 1/2	62	64 1/2
72	81	NA		NA		81 1/2	80	78 1/2	76	64 1/2

All specifications are subject to change without notice unless approved in submittal by Moffitt Corporation, Inc.

PF7100-7300 Series Belt Drive Exhaust and Supply Fan Panels
Level 1 Construction Submittal Data

Rear View

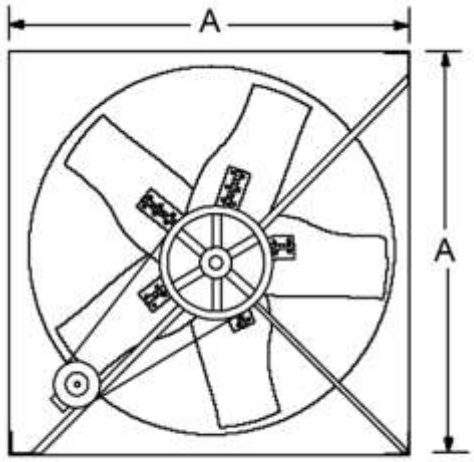

Exhaust Fan

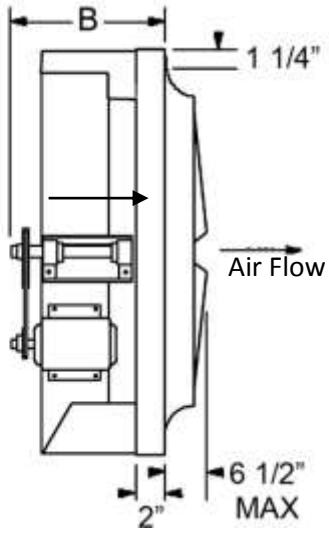

Supply Fan

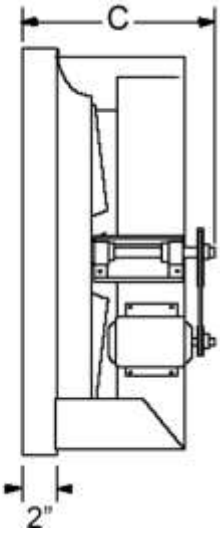

FAN SIZE	A SQ. O.D. PANEL	B EXHAUST	C SUPPLY	APPROX. WEIGHT	MAX MOTOR	MATERIAL GA. OR THICKNESS				
						SHAFT	PANEL	SUPPORT FRAME	BLADES	HUB SPIDER
20	24	15	23	85	56H	3/4	18	16	18	14
24	30	15	23	90	145T	1	16	12	16	10
30	36	15	24	100	145T					10
36	42	15	24	105	145T					7
42	48	16	24	110	145T				14	7
48	54	16	24	125	145T					7
54	60	20	26	240	182T	1 3/16	14			1/4
60	66	20	26	285	182T					1/4

Construction and Material Specification - Level 1

Fan panel, motor & bearing mounts- All welded G90 galvanized.
Fan blades- Die formed G90 galv., bolted to hub. FRP blades with cast aluminum hub also available.
Hub- Die formed steel, epoxy coated, keyed to shaft.
Bearings- Air handling, self-aligning, cast iron pillow block with grease fittings, L50 = 200,000 hrs. Avg. life.
Shaft- Turned, ground and polished, keyed to propeller hub and sheave.
Drives- Cast iron, 150% S.F., single groove and adjustable thru 3hp, keyed to motor and fan shaft.
Belts- Non-static conducting, oil resistant, single groove thru 3hp.Construction and Material Specification

All specifications are subject to change without notice unless approved in submittal by Moffitt Corporation, Inc.

PF7100-7300 Series Belt Drive Exhaust and Supply Fan Panels
Level 2 Construction Submittal Data

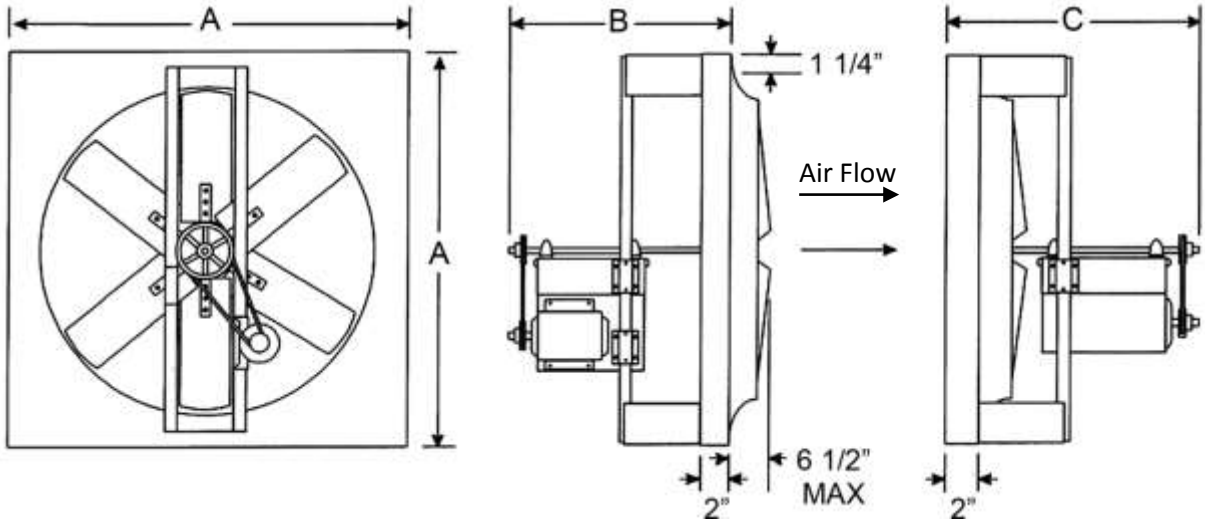

FAN SIZE	A SQ. O.D. PANEL	B EXHAUST	C SUPPLY	APPROX. WEIGHT	MAX MOTOR	SHAFT	MATERIAL GA. OR THICKNESS							
							PANEL		SUPPORT FRAME		BLADE		HUB	PIPE FRAME
							GALV	ALUM	GALV	ALUM	GALV	ALUM		
24	30	22	26	120	145T	1	18	.08	14	1/4	16	.08	1/4	1 1/4" O.D. SCHED. 40
30	36	22	26	180	182T									
36	42	22	26	215	184T	1 3/16			10					
42	48	22	26	235	184T		16						3/8	
48	54	22	26	300	184T			.100						
54	60	22	26	400	184T		14							
60	66	24	28	490	184T									

Construction and Material Specification - Level 2

Fan panel, motor & bearing mounts- All welded G90 galvanized.
Pipe support frame- Welded 1 1/4" O.D. schedule 40 galv. pipe.
Fan blades- G90 galv. (multiple laminations), bolted to hub. FRP Blades with cast aluminum hub also available.
Hub- Heavy duty welded steel, epoxy coated, keyed to shaft.
Bearings- Air handling, self-aligning, cast iron pillow block with grease fittings, L50 = 200,000 hrs. avg. life.
Shaft- Turned, ground and polished, keyed to propeller hub and sheave**.**
Drives- Cast iron, 150% S.F., single groove and adjustable thru 3hp, keyed to motor and fan shaft.

All specifications are subject to change without notice unless approved in submittal by Moffitt Corporation, Inc.

PF7100-7300 Series Belt Drive Exhaust and Supply Fan Panels
Level 3 Construction Submittal Data

Rear View

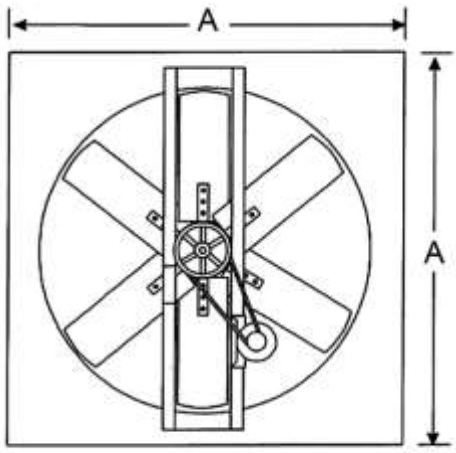

Exhaust Fan

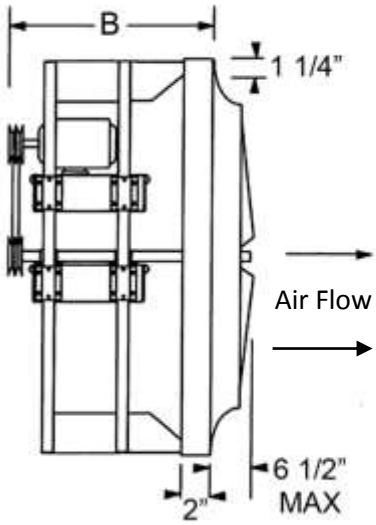

Supply Fan

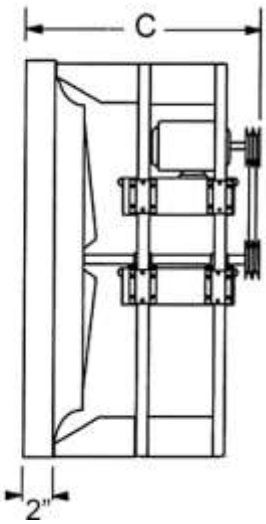

FAN SIZE	A SQ. O.D. PANEL	B EXHAUST	C SUPPLY	APPROX WEIGHT	MAX MOTOR	SHAFT	MATERIAL GA. OR THICKNESS							
							PANEL		SUPPORT FRAME		BLADE		HUB	PIPE FRAME
							GALV	ALUM	GALV	ALUM	GALV	ALUM		
42	48	24	28	260	213T	1 7/16	16	.08	10	1/4	16	.08	3/8	1 1/4" O.D. SCHED . 40
48	54	24	28	330	215T			.100						
54	60	24	28	500	254T	2 3/16	14							
60	66	24	28	530	256T									
72	80	24	28	600	256T									

Construction and Material Specification - Level 3

Fan panel, motor & bearing mounts- All welded G90 galvanized.

Pipe support frame- H.D. four post welded 1 1/4" O.D. schedule 40 galv. pipe.

Fan blades- G90 galv. (multiple laminations), bolted to hub. FRP Blades with cast aluminum hub also available.

Hub- Heavy duty welded steel, epoxy coated, keyed to shaft.

Bearings- Air handling, self-aligning, cast iron pillow block with grease fittings, L50 = 200,000 hrs. avg. life.

Shaft- Turned, ground and polished, keyed to propeller hub and sheave.

Drives- Cast iron, 150% S.F., single groove and adjustable thru 3hp, keyed to motor and fan shaft.

All specifications are subject to change without notice unless approved in submittal by Moffitt Corporation, Inc.

PF7100-7300 Series Direct Drive Exhaust and Supply Fan Panels Submittal Data

Rear View

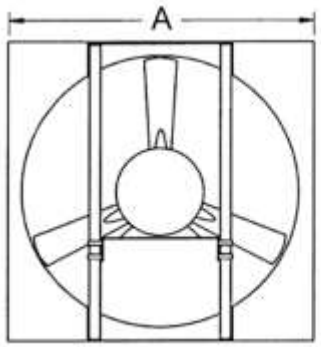

Exhaust Fan

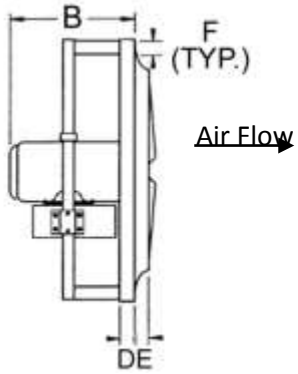

Supply Fan

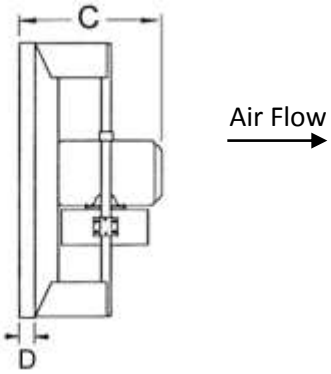

FAN SIZE	A SQ. O.D. PANEL	B² (MAX)	C² (MAX)	D	E	F	METAL GUAGES¹ FAN PANELS	MOTOR PLATES	BRACKETS	PIPES 2	AVG. WT.
24	30	16	20	2	4 1/2	3/4	16	10	12	1 1/4" O.D. SCHED. 40	100
30	36	18	23	2	4 3/4	1					130
36	42	25	30	2	4 1/2	1					180
42	48	25	30	2	4 3/4	1 1/4					190
48	54	25	31	2 3/4	5 3/4	1 1/2	14				300
54	60	25	31	2 3/4	5 3/4	1 1/2					320
60	66	25	31	2 3/4	5 3/4	1 1/2					380

All specifications are subject to change without notice unless approved in submittal by Moffitt Corporation, Inc.

PF7100-7300 Industrial Axial Wall Fans Series Fan Dimensions

Level One Construction

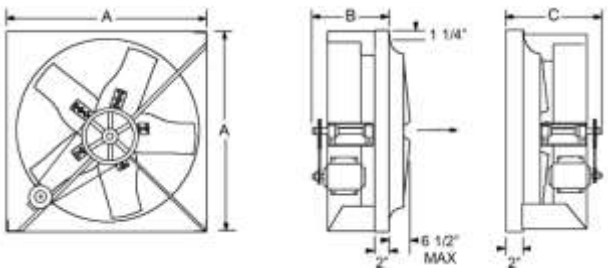

FAN SIZE	A SQ	B	C	D	E	F	Damper O.D. SQ Flange
20	24	2	5	1.25	15	23	22.5
24	30	2	7.5	1.25	15	23	28.5
30	36	2	7.5	1.25	15	23	34.5
36	42	2	7.5	1.25	15	23	40.5
42	48	2	7.5	1.25	16	24	46.5
48	54	2	7.5	1.25	16	24	52.5
54	60	2	7.5	1.25	20	26	58.5
60	66	2	7.5	1.25	20	26	64.5

Level Two Construction

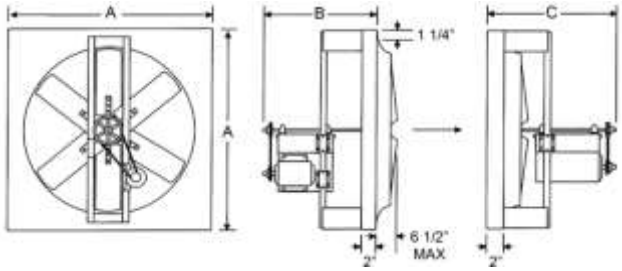

FAN SIZE	A SQ	B	C	D	E	F	Damper O.D. SQ Flange
24	30	2	7.5	1.25	22	26	28.5
30	36	2	7.5	1.25	22	26	34.5
36	42	2	7.5	1.25	22	26	40.5
42	48	2	7.5	1.25	22	26	46.5
48	54	2	7.5	1.25	22	26	52.5
54	60	2	7.5	1.25	22	26	58.5
60	66	2	7.5	1.25	24	28	64.5

Level Three Construction

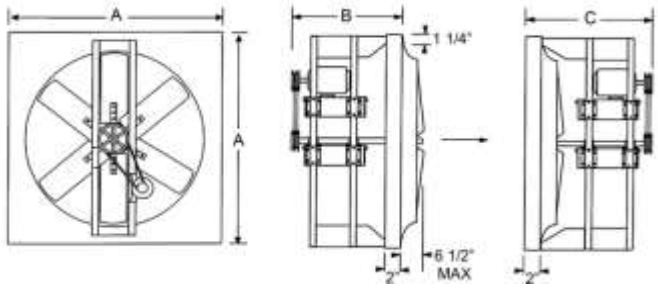

FAN SIZE	A SQ	B	C	D	E	F	Damper O.D. SQ Flange
42	48	2	7.5	1.25	24	28	46.5
48	54	2	7.5	1.25	24	28	52.5
54	60	2	7.5	1.25	24	28	58.5
60	66	2	7.5	1.25	24	28	64.5
72	80	2	8	1.25	24	28	78.5

*All Dimensions Shown in Inches

PF7100-7300 Series Wall Box

Wall boxes (housings) are used to mount fans and their accessories in a wall. The box may be positioned inside or outside the building. Typically, the wall box for exhaust applications incorporates a damper on the exterior of the building and a guard on the interior. On supply applications, a rain hood and motorized damper are highly recommended to help prevent moisture from entering into the building. For installation with wall boxes extending outside the building, field caulking and/or flashing of seams and un-used pre-punches mounting holes is required.

Rear View From Motor Side

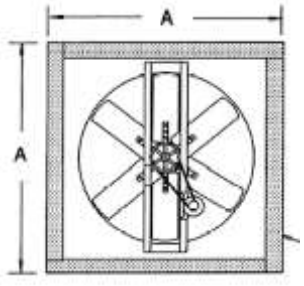

2" Flange
4- Sides
Front & Back

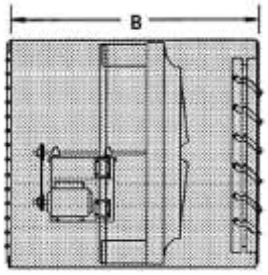

Side View Shown with Motor side wire Guard & Gravity Exhaust Damper

DIMENSIONS (INCHES)							
FAN SIZE	"A" SQ	MIN. WALL OPENING (SQ)	DAMPER FLANGE (O.D.)	LENGTH "B" LEVEL 1 FAN CONST. EX.	LENGTH "B" LEVEL 1 FAN CONST. SUP.	LENGTH "B" LEVEL 2 & 3 FAN CONST. EX.	LENGTH "B" LEVEL 2 & 3 FAN CONST. SUP.
20	25	25 1/2	22 1/2	32 Note 1.	44	NA	NA
24	31	31 1/2	28 1/2			44	44
30	37	37 1/2	34 1/2				
36	43	43 1/2	40 1/2				
42	49	49 1/2	46 1/2				
48	55	55 1/2	52 1/2				
54	61	61 1/2	58 1/2	44			
60	67	67 1/2	64 1/2				
72	81	81 1/2	78 1/2	NA	NA		

FAN SIZE	FAN CONSTRUCTION LEVEL 1 GALV	FAN CONSTRUCTION LEVEL 1 ALUM	FAN CONSTRUCTION LEVEL 2 & 3 GALV	FAN CONSTRUCTION LEVEL 2 & 3 ALUM
20	20 ga	0.063	N/A	N/A
24	20 ga	0.063	18 ga	0.08
30	20 ga	0.063	18 ga	0.08
36	20 ga	0.063	16 ga	0.08
42	18 ga	0.08	16 ga	0.08
48	18 ga	0.08	16 ga	0.08
54	14 ga	0.08	14 ga	0.08
60	14 ga	0.08	14 ga	0.08
72	N/A	N/A	14ga	0.08

Wall Box Flush with Outside Wall

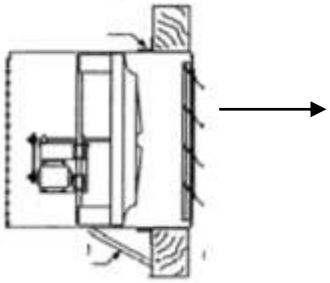

Wall Box in Middle Position

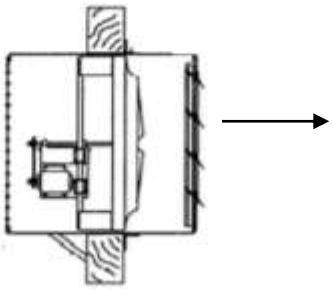

Wall Box Flush With Inside Wall

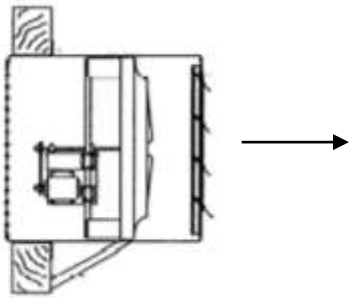

Notes:

- All Units with motorized damper require the 44" long wall box
- Standard material is G90 galvanized, Aluminum optional
- Dimension "A" includes fastener heads (approx. 5/8" extra)
- Wall box ships assembled with fan unless ordered knocked down for field assembly.
- Angle mounting flanges (optional) ship unattached.
- *CAUTION:* box position when mounted may require additional support (by others)

PF7300 Safety Guard

Safety guards are strongly recommended to protect personnel from accidental injury and to prevent objects from entering the fan. OSHA approved guards are required in many installations and when the fans are located within 7 feet of the floor or work/access area.

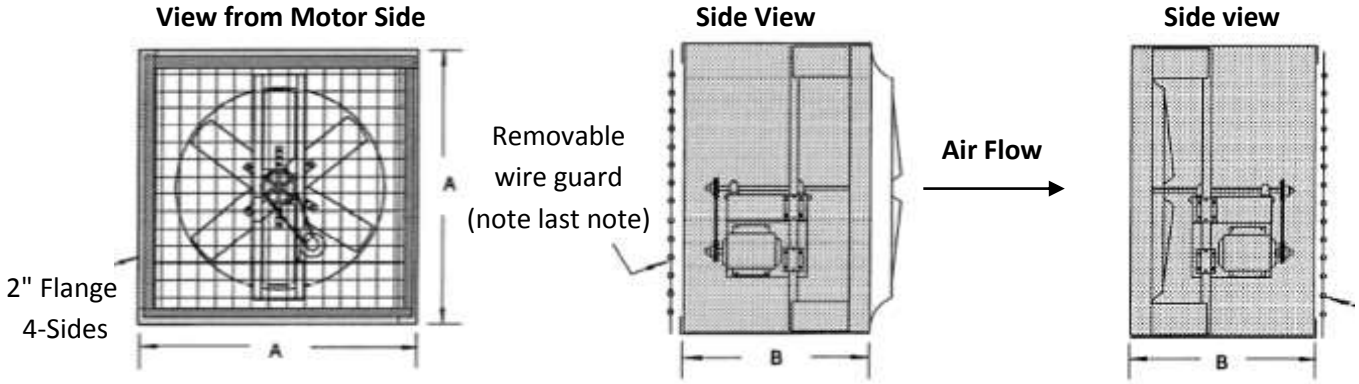

Level 2 Exhaust Fan Shown - Shown with Removable Wire Guard

Notes:

- Dimension "A" includes fasteners (approx. 5/8")
- Guard is fully assembled and attached to fan unless specified to ship knocked down.
- Sides are G90 galvanized (alum. optional).
- *NOT* compatible with accessory mounting collar or front (propeller) side guard (see wall box/housing). Adequate clearance must be maintained between fan blades and damper or louver.
- Standard wire mesh is 16 ga. galvanized wire welded in 1/2" x 1" mesh mounted in a removable frame.
- Optional aluminum H.D. guard is .051" thick expanded 1/2" x 1/2" mesh mounted in a removable frame. Both choices of wire satisfy OSHA requirements

FAN SIZE	A (SQ)	B LENGTH		MATERIAL / THICKNESS	
		EXHAUST	SUPPLY	GLAV (GA.)	ALUM (in.)
20	25	34	34	18	0.08
24	30	34	34	18	0.08
30	36	34	34	18	0.08
36	42	34	34	18	0.08
42	48	34	34	18	0.08
48	54	34	34	18	0.08
54	60	34	34	16	0.08
60	66	34	34	16	0.08
72	80	34	34	14	0.08

PF7300 Series Wall Collar or Front Guard

The G90 galvanized steel (alum. optional) mounting collar can be used with the flat wire guard or a damper (not both), along with a rain hood for weather protection. This accessory is not compatible with the motor side guard (see also wall box with flat guard). OSHA safety guards are required in many installations and where the fans are within 7 feet of the floor or work/access areas. (Table units in Inches)

Wall Collar

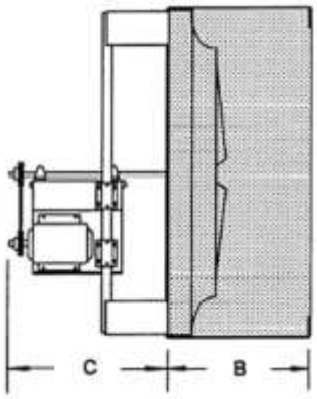

Front Guard

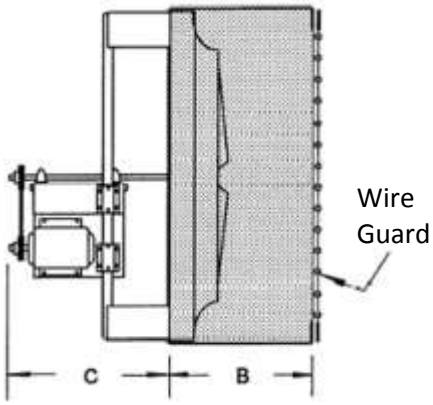

View from Front

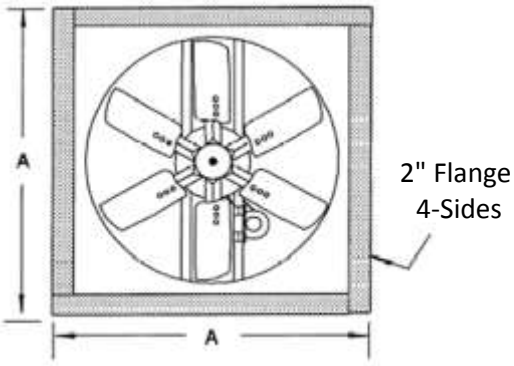

FAN SIZE	A (SQ)	B	C (MAX)		WALL OPENING (SQ)	MATERIAL (Ga. Or THICKNESS)		WEIGHT(LBS)		STANDARD DAMPER	
			EXHAUST	SUPPLY		GLAV (GA.)	ALUM (in.)	GALV	ALUM	FLANGE OD	ID
20	25	21	20	24	25 ¼	18	0.08	15	12	22 ½	20
24	31	21	20	24	31 ¼	18	0.08	17	14	28 ½	26
30	37	21	20	24	37 ¼	18	0.08	20	16	34 ½	32
36	43	21	20	24	43 ¼	18	0.08	24	19	40 ½	38
42	49	21	22	26	49 ¼	18	0.08	28	23	46 ½	44
48	55	21	22	26	55 ¼	18	0.08	31	25	52 ½	50
54	61	21	22	26	61 ¼	16	0.08	35	28	58 ½	56
60	67	21	22	26	67 ¼	16	0.08	40	32	64 ½	62
72	81	26	22	26	81 ¼	14	0.08	60	50	78 ½	76

PF7300 Series Wall Collar or Front Guard cont.

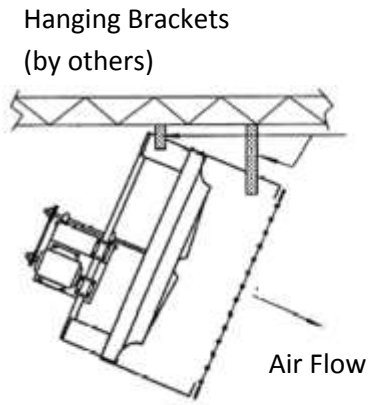

Circulation fan shown suspended from ceiling with front (prop) guard

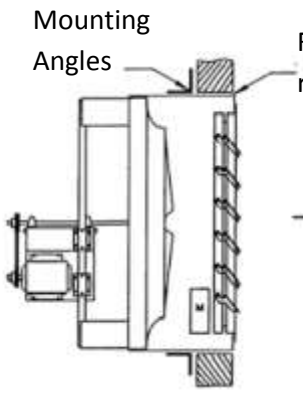

Exhaust Fan shown in Wall Collar with Motorized Damper

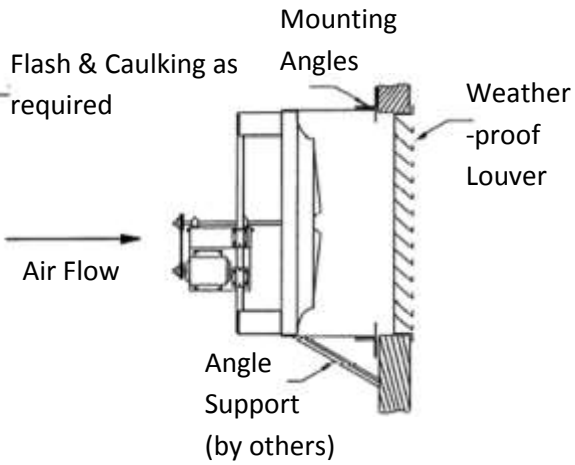

Exhaust (or supply) Fan shown in Wall Collar with Rainproof Louver

Notes:

1. Wall collar and front guard ship fully assembled to fan unless specified knocked down.
2. G90 galvanized construction is standard (aluminum optional).
3. Wall collar length “B” maintains proper clearance for standard motorized shutter.
4. May be used as a front (propeller) side guard when fitted with the flat wire guard, which satisfies OSHA requirements.
5. NOT compatible with accessory- sheet metal and wire motor side guard (see wall box).

PF7000–7300 Rain Hood – Supply

Rain hoods are recommended for all supply installations and wherever additional weather protection is desired. Refer to supply style rain hood for supply installations. Rain hoods do not guarantee that water, snow, or other airborne particles will not become entrained in the airstream and enter the building through the fan.

Notes:

- Hoods ship in several pieces for field assembly unless specified factory assembled.
- Sizes 20" to 48" – arrive knocked down in 7 pieces, 54" to 72" arrive knocked down in 13 pieces
- Mounting holes may require field drilling.
- Standard construction is G90 galvanized steel.
- Hoods are sized to fit standard wall boxes/housings.
- Sizes 48" and larger have support angles fastened to front edge.
- Optional bird screen is recommended to prevent critters or debris from entering the fan.
- Rain hoods are recommended for all supply installations and wherever additional weather protection is desired. Refer to supply style rain hood for supply installations.

45° - EXHAUST

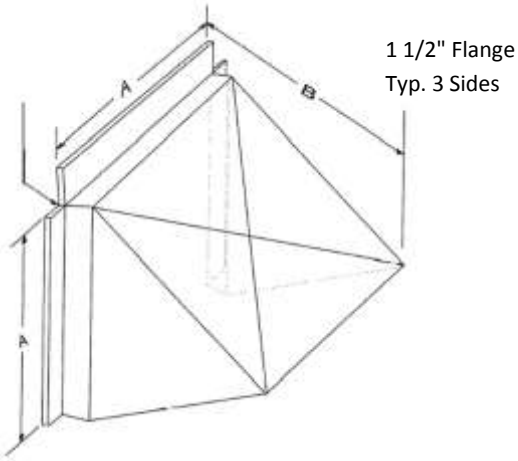

FAN SIZE	A	B	Gauge (2)	A (SQ)
20	22	24 ¼	18	25
24	28	28 ½	18	30
30	34	34 ½	18	36
36	40	40 ½	18	42
42	46	46 ½	18	48
48	52	49 ½	16	54
54	58	58 ½	16	60
60	64	64 ½	16	66
72	78	64 ½	16	80

90° - SUPPLY OR EXHAUST

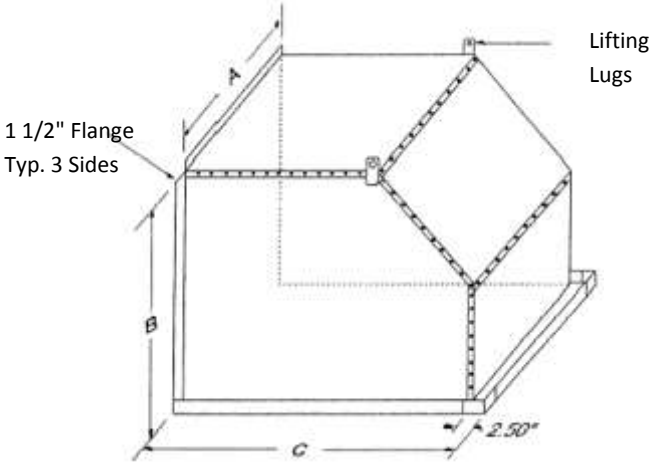

FAN SIZE	A	B	C	Gauge (2)	A (SQ)
20	22	22	27 ¾	18	25
24	27 ¼	26 ½	38 ½	18	30
30	32 ½	33 ½	44 ½	18	36
36	38 ½	39 ¼	49	18	42
42	44 ½	45 ¼	56 ½	18	48
48	50 ½	51 ½	62 ½	18	54
54	56 ¾	57 ½	73	18	60
60	62 ¾	63	73	18	66
72	76 ¾	76 ¾	73	18	80

PF7000 Series 90° Rain Hood – Picture & Assembly Diagram

Rain hood is shown (below) assembled and face down.

Bird screen (intake)

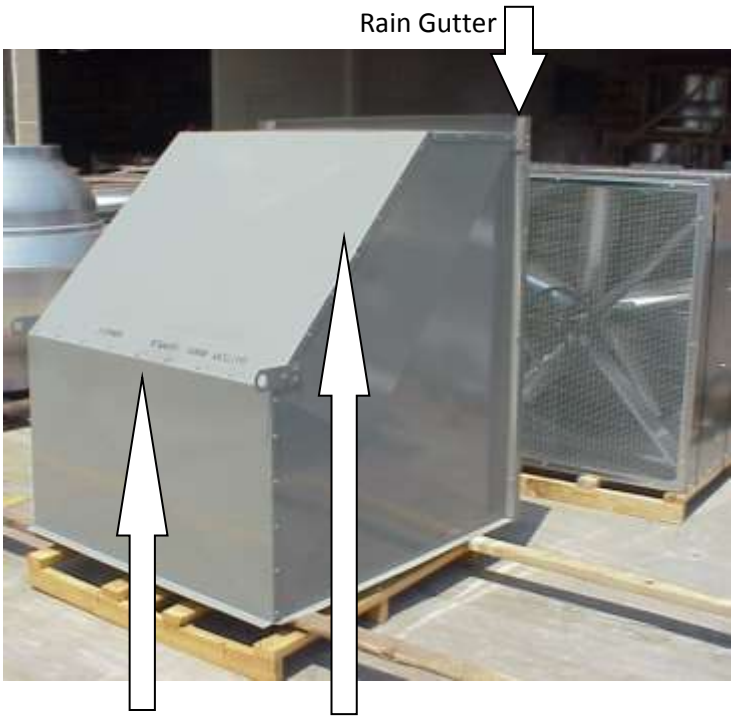

Lifting lugs Epoxy Finish (special)

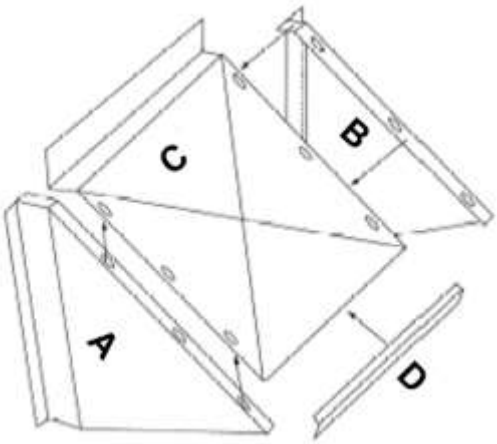

Assembly Instructions for Knocked Down Rain Hoods

1. Align side "A" with top (C)
2. Fasten securely with 1/4" sheet metal screws provided
3. Attach side "B" following the same steps
4. On sizes 48" and larger, attach support angle (D) to front edge as shown with sheet metal screws provided.
5. Attach (optional) wire bird guard (when purchased) to factory flanges/rain channels or to field provided 1 1/2" x 1 1/2" galvanized formed angle (approx. 18ga)
6. Securely fasten to factory wall box flanged (drill as required) and thoroughly flash and caulk wall opening and seams.

PF7100-7300 Filtered Wall Housing Sidewall Propeller Fans

Filtered Supply

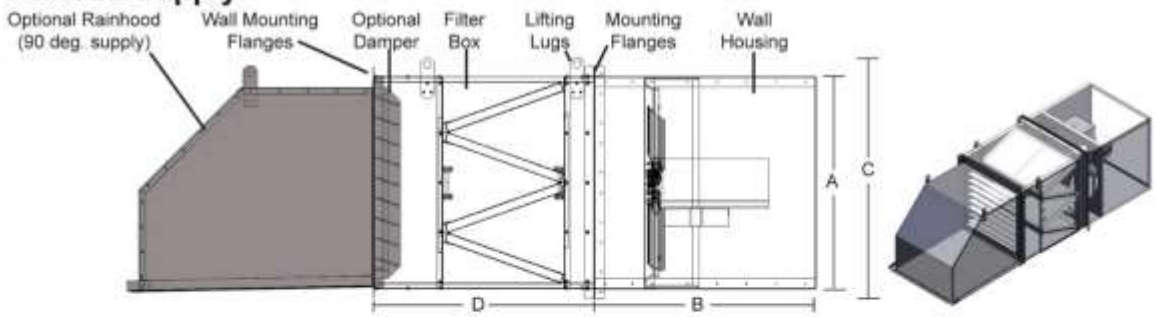

Filtered Exhaust

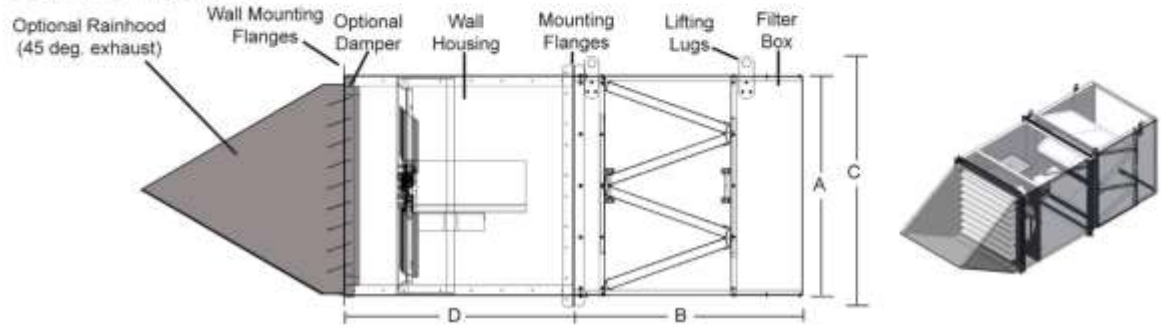

FAN SIZE	C (MAX)		MINIMUM WALL OPENING (SQ)	FILTER BOX			
	A	B LENGTH LEVEL 1 & LEVEL 2		C	D	# OF FILTERS	FILTER ACTUAL DIMENSIONS
20	25	44	25 1/2	25	44 1/8	3	19 5/8 x 24 5/8 x 1 7/8
24	31	44	31 1/2	31	41 1/8	4	19 5/8 x 24 5/8 x 1 7/8
30	37	44	37 1/2	37	44 1/8	8	15 5/8 x 24 5/8 x 1 7/8
36	43	44	43 1/2	43	44 1/8	8	19 5/8 x 24 5/8 x 1 7/8
42	49	44	49 1/2	49	44 1/8	10	19 5/8 x 24 5/8 x 1 7/8
48	55	44	55 1/2	55	40 1/2	12	19 5/8 x 24 5/8 x 1 7/8
54	61	44	61 1/2	61	44 1/8	15	19 5/8 x 24 5/8 x 1 7/8
60	67	44	67 1/2	67	44 1/8	15	19 5/8 x 24 5/8 x 1 7/8
20	25	44	25 1/2	25	44 1/8	3	19 5/8 x 24 5/8 x 1 7/8

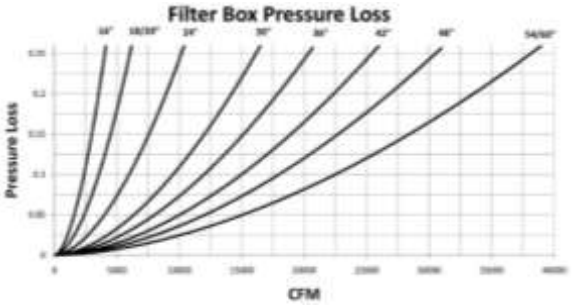

NO.	DESCRIPTION
1	Filter box hinged doors
2	Filter pack
3	Door hinged assy.
4	Mounting Collar
4	
6	5’16” Flange Nut ZP

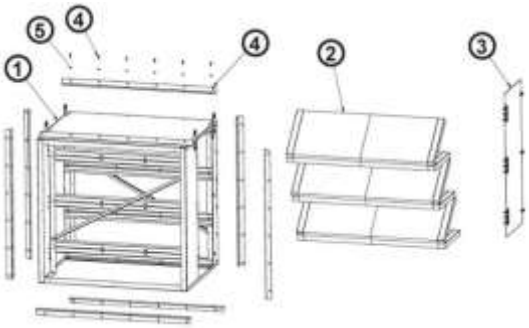

PF7100-7300 Series Damper Submittal Data - Back Draft damper

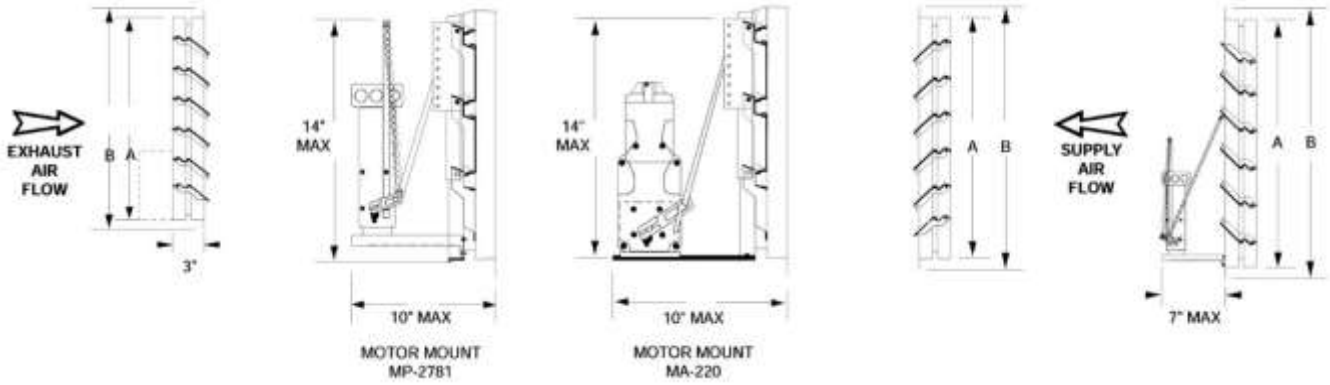

FAN SIZE	A SIZE	B SQ OD FLANGE	PANELS (DETAIL)	MOTOR TYPE			
				EXHAUST		SUPPLY	
				TYPE	QTY	TYPE	QTY
20	20	22 1/2	1	MP-2781	1	MP-2781-S	1
24	26	28 1/2	1	MP-2781	1	MP-2781-S	1
30	32	34 1/2	1	MP-2781	1	MA-220-S	1
36	38	40 1/2	1	MA-220	1	MA-220-S	1
42	44	46 1/2	2	MA-220	1	MA-220-S	2
48	50	52 1/2	2	MA-220	1	MA-220-S	2
54	56	58 1/2	3	MA-220	2	MA-220-S	2
60	62	64 1/2	3	MA-220	2	MA-220-S	2
72	77	79 1/2	4	MA-220	4	MA-220-S	4

Standard Specifications

- Max. Face Velocity: 3000 fpm
- Temp. Limits: -40°F to 200°F (-40°C to 94°C)
- Min. Size: 8 x 8
- Size: Single section: 42 x 64 Max W/H
- Multiple section assembly- Unlimited size
- Frame: 20 gauge galvanized steel Axles; Stainless Steel
- Blades: .025 thick aluminum HD 28 ga. galvanized steel

Notes

- Do not mount fan less than 12 in. from shutter.
- Motors available in 24V, 120V, 240 V & 440V.
- Dampers shipped in individual cartons.
- Motors and mounting hardware ship separately.
- Center-pivoted dampers must be used on reversible fans.
- Multiple section assemblies may require bracing to support the weight of the assembly and to hold against system pressure. (BRACING SUPPLIED BY OTHERS)

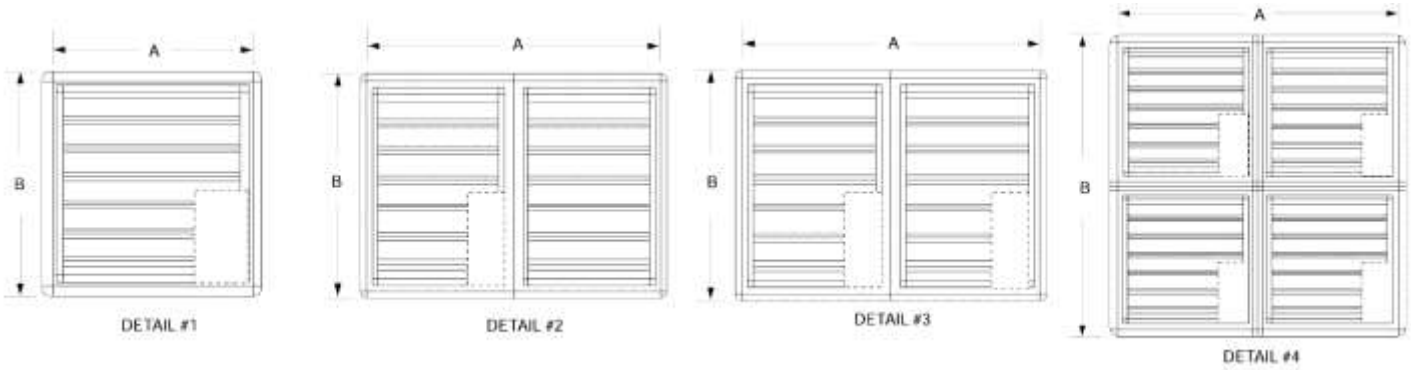

PF7100-7300 Series Damper Submittal Data - Center Pivot Motorized

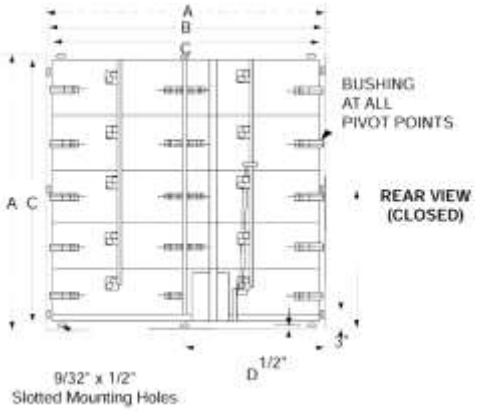

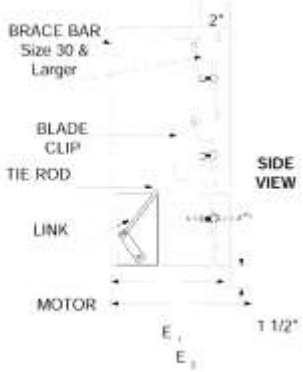

Galvanized Steel and Aluminum Dampers

- All dampers can be used for intake or exhaust applications.
- All dampers are factory motorized, 120/240 dual voltage single phase motor, power open-spring close.
- Ample 9/32” x 1/2” slotted mounting holes in 1 1/2” flange.
- Sizes larger than 48” wide are double panel- factory joined.
- Max velocity: 3000 FPM
- Max differential pressure: 2” W.G**.**
- *NOT SUITABLE FOR USE IN HAZARDOUS OR FLAMMABLE AREAS OR AIRSTREAMS.*

Galvanized Steel Construction - Frame: 14 Gauge

- 16 Gauge galvanized steel center pivoted blades, open to a full 90° to allow full air flow.
- 1/8 inch thick galvanized tie rod w/ attaching blade clip.
- Galvanized dampers have 1/2 inch diameter plated steel pivot shaft with brass grommet bushing.

Aluminum Construction - Frame: 1/8 Inch thick Extruded

- Extruded aluminum blades with nylon bushings are .080 thick center pivoted to allow full 90° opening.
- 1/8” thick aluminum tie rod and attaching blade clip.

FAN SIZE	OPENING REQUIRED	A O. D.	B (1)	C “Size”	D (Center of Holes)	# of Panels	G		Motor (2)		
							Closed (E-1)	Open (E-2)	Power Supply	Max Amps	Stall Torque (in. lbs)
24	27	29	24-1/2	26	-	1 x 1	7-1/4	8-1/2	120-240V 60Hz	0.3 / 0.6	25
30	33	35	30-1/2	32	-	1 x 1	10-1/4	13-3/4			
36	39	41	36-1/2	38	19-1/2	1 x 1	10-1/4	13-3/4			
42	45	47	42-1/2	44	22-1/2	1 x 1	10-1/4	13-3/4			
48	51	53	48-1/2	50	25-1/2	2 x 1	10-1/4	13-3/4			
54	57	59	54-1/2	56	28-1/2	2 x 1	10-1/4	12-3/4	240V 60 Hz	0.5	60
60	63	65	60-1/2	62	31-1/2	2 x 1	10-1/4	12-3/4			
72	77	79	76-1/2	76	39-1/2	2 x 1	10-1/4	12-3/4			

PF7100-7300 Series Assembly Instructions for Wall Box/Housing

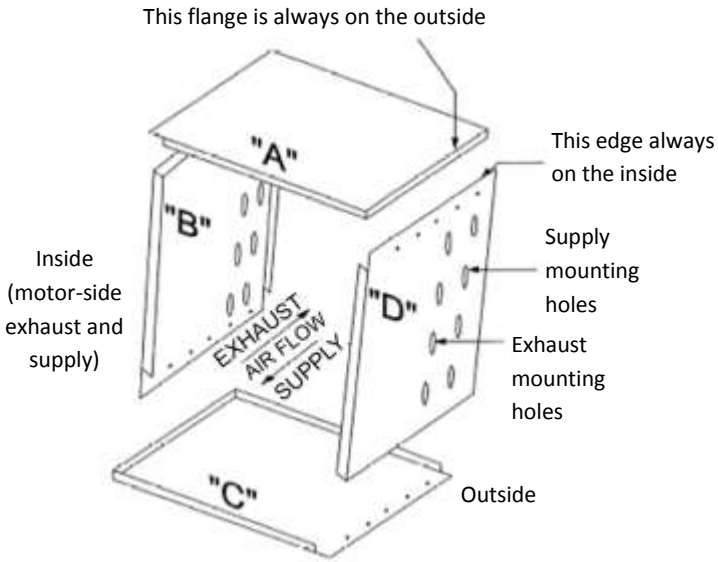

CAUTION: When wall housing extends outside the building, field caulking and/or flashing of seams and unused pre-punched mounting holes is required.

SIZE	MIN. WALL OPENING
24	31 ½
30	37 ½
36	43 ½
48	551 /2
54	61 ½
60	67 ½
72	81 ½

Instructions

1. Assemble pieces "A", "B" & "C" with flanges on the outside. Use fasteners provided.
2. Install fan in proper exhaust or supply location maintaining the required distance between fan and shutter (if shutter is used).
3. Attach side "D".
4. Install wall box in wall with accessory angles, flat flanges or by other means as needed.
5. *RAINHOODS ARE RECOMMENDED FOR ALL SUPPLY APPLICATIONS AND FOR ADDITIONAL WEATHER PROTECTION FOR EXHAUST APPLICATIONS.*

WALL HOUSING FLUSH WITH INSIDE

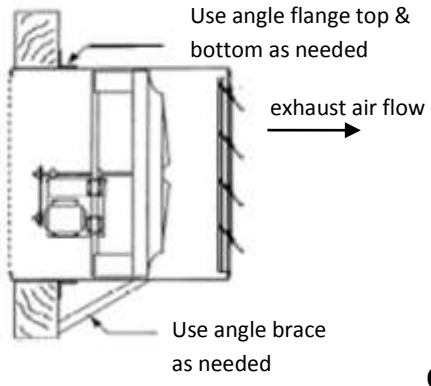

Inside **Outside**

WALL HOUSING IN MIDDLE POSITION

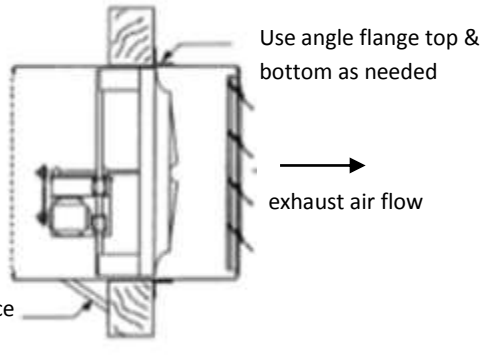

Inside **Outside**

WALL HOUSING FLUSH WITH OUTSIDE

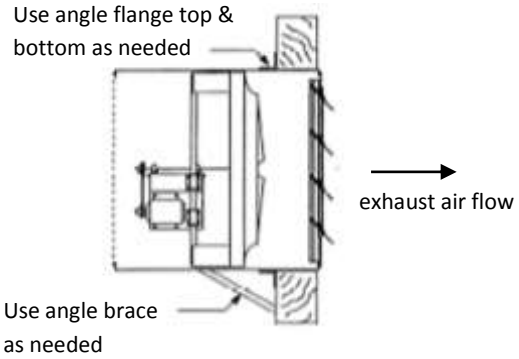

PF7100-7300 Quick Ship Options

The following Quick Ship options are available. Please contact Moffitt Corporation for additional shipping info.

PF 7100-7300 Series – Level 1 Construction

20-48: Single Phase ODP	Next Day
20-42 (1/4 and 1/3 HP only): Single Phase ODP	3-Day
20-48: Single Phase ODP	Next Day
20-48: Fan Body Only*	Next Day
20-48: Wall Pack Assembled**	Next Day
20-48: Gravity Shutter***	Next Day

PF 7100-7300 Series – Level 2 Construction

24-48: Single Phase ODP	10-Day
24-48: Three Phase ODP	10-Day
24-48: Fan Body Only*	10-Day
24-48: Wall Pack Assembled**	10-Day
24-48: Gravity Shutter***	Next Day

Electrical Disconnect Switches, Non fusible Type (Ship loose for field installation) are available for Next Day Shipping:

Open NEMA 1 Enclosure: Single Phase, 115/208-230

Open NEMA 1 Enclosure: Three Phase, 208-230/460

Rain tight NEMA 3 Enclosure: Single Phase, 115/208-230

Rain tight NEMA 3 Enclosure: Three Phase, 208-230/460

PF7100 Direct Drive Performance Data

	Motor HP	Max BHP	Motor RPM	Sones (0" SP)	STATIC PRESSURE (INCHES W.G.) 0	1/10	1/8	1/4	3/8	1/2	5/8	3/4	1
PF 7124	1/3	0.37	1160	17.8	5600	4960	4800	3600	–	–	–	–	–
	1/2	0.60	1160	22	6600	6200	6100	5400	4300	–	–	–	–
	3/4	0.82	1160	20	7800	7240	7100	6300	5400	–	–	–	–
	1	1.09	1160	21	8700	8140	8000	7300	6300	4900	–	–	–
	1/2	0.55	1750	27	5900	5420	5300	4700	3900	3000	–	–	–
	3/4	0.81	1750	28	7000	6600	6500	5900	5300	4400	3500	–	–
	1	1.15	1750	32	8000	7600	7500	7000	6300	5500	4700	3700	–
	1 1/2	1.66	1750	35	9000	8760	8700	8300	7900	7400	6900	6200	–
	2	2.25	1750	35	10500	10180	10100	9600	9100	8600	8100	7400	5900
	3	3.30	1750	37	12500	12100	12000	11500	11100	10500	10000	9300	7900
PF7130	1	1.12	870	19.9	11700	10700	10450	8900	6300	–	–	–	–
	1 1/2	1.65	870	24	14300	13300	13050	11400	8850	5550	–	–	–
	3/4	0.84	1160	25	9900	9020	8800	7500	5700	–	–	–	–
	1	1.16	1160	28	10600	10340	10054	9900	9478	9000	7900	6500	–
	1 1/2	1.67	1160	28	12800	12080	11900	10900	9800	8400	6700	–	–
	2	2.28	1160	29	14400	13680	13500	12400	11300	9800	7800	6000	–
	3	3.37	1160	36	17300	16660	16500	15600	14700	13000	11200	8600	–
	2	2.27	1160	44	13800	13160	13000	12200	11300	10400	–	–	–
	3	3.38	1750	55	14200	13800	13700	13200	12700	12100	1150	10700	9300
PF7136	1	1.14	870	25	13000	12040	11800	10200	8200	6000	–	–	–
	1 1/2	1.70	1160	26	16300	15180	14900	13200	11000	7900	–	–	–
	2	2.23	1160	27	18500	17140	16800	15000	12900	9600	–	–	–
	3	3.36	1160	32	21100	20060	19800	18100	15800	12800	9600	8100	–
	3/4	0.85	1160	30	11500	10220	9900	8100	6200	–	–	–	–
	1	1.18	1160	31	13500	12460	12200	10700	8800	6500	–	–	–
	1 1/2	1.73	1160	33	15900	14780	14500	13000	11300	9200	–	–	–
	2	2.25	1160	39	15700	14980	14800	13800	12800	11600	10200	8500	–
	3	3.39	1160	40	20700	19900	19700	18600	17300	15900	14300	12300	–
	5	5.49	1160	42	25100	24200	24000	22900	21700	20300	18700	16700	–
	7 1/2	8.15	1160	53	30500	29540	29300	28100	26700	25200	23400	21400	15500
	3	3.28	1750	58	18000	17200	17000	16000	15000	13900	12800	11600	9100
	5	5.42	1750	81	18600	18280	18200	17800	17300	16800	16200	15700	14500
	7 1/2	8.25	1750	75	27000	26360	26200	25400	24600	23600	22500	21500	19200

PF7100 Direct Drive Performance Data cont.

	Motor HP	Max BHP	Motor RPM	Sones (0" SP)	STATIC PRESSURE (INCHES W.G.)								
					0	1/10	1/8	1/4	3/8	1/2	5/8	3/4	1
PF7142	1 1/2	1.72	870	36	17500	16140	15800	14100	12000	9500	7500	–	–
	2	2.22	870	36	19800	18520	18200	16200	14000	11000	8800	7200	–
	3	3.26	870	36	24500	22980	22600	20600	18000	14800	11200	9200	–
	5	5.53	870	40	31300	29780	29400	27300	24800	21800	17000	13200	–
	3	3.3	1160	60	20500	19700	19500	18500	17300	15900	14400	13000	9700
	5	5.45	1160	61	28000	27200	27000	25800	24500	22800	20900	18900	13700
	7 1/2	8.26	1160	62	34500	33540	33300	32000	30600	28800	26800	24700	19400
	5	5.41	1750	89	26000	24960	24700	23500	22100	20700	19300	17900	–
	7 1/2	8.25	1750	94	32500	31700	31500	30300	29140	27800	26500	25200	–
PF7148	1 1/2	1.68	870	36	22800	20560	20000	16600	12100	–	–	–	–
	2	2.25	870	38	25900	23740	23200	19800	15800	–	–	–	–
	3	3.37	870	48	27000	25640	25300	21100	18400	15200	–	–	–
	5	5.57	870	48	36000	34320	33900	31600	29000	25800	21900	17800	–
	7 1/2	8.14	870	51	42100	40420	40000	37600	34900	31800	28000	22500	–
	10	11.03	870	63	46600	44920	44500	42200	39500	36100	32300	27500	20500
	3	3.29	1160	59	27000	25320	24900	22600	19800	17000	13800	11100	–
	5	5.54	1160	64	34700	33180	32800	30700	28400	26000	22900	19300	–
	7 1/2	8.12	1160	76	40500	38900	38500	36500	34000	31500	28700	25500	–
	10	10.81	1160	81	43400	42280	42000	40500	39000	37200	35200	33000	28000
PF7154	5	5.41	1160	75	37300	35220	34700	32000	29200	26100	23000	19600	–
	7 1/2	8.21	1160	79	46000	44320	43900	41700	39200	36400	33000	29500	–
	10	11	1160	86	51600	49920	49500	47300	44800	42200	39300	36200	–
PF7160	7 1/2	8.25	870	77	49000	47000	46500	43900	41100	37700	34200	30500	22700
	10	10.33	870	77	55800	53800	53300	50500	47300	43600	39800	35700	27000

PF7320 Direct Drive Performance Data

Limits			Panel OD SQ	Min. Wall Opening	Damper OD	Approx. Wt.
Model	RPM	Motor Frame				
L1	1350	56H	24	25 1/2	22 1/2	85

LEVEL 1 CONSTRUCTION

MODEL PF 7320

Motor HP	Max BHP	Fan RPM	Sones (0" SP)	STATIC PRESSURE (INCHES W.G.) 0.000	0.100	0.125	0.150	0.200	0.250	0.300	0.375	0.500
	0.25	905	10.5	3774	3364	3247	3113					
	0.27	920	10.8	3837	3435	3321	3193	2829				
1/4	0.28	930	11.0	3879	3482	3370	3246	2900				
	0.29	945	11.3	3941	3553	3442	3324	3002				
	0.30	955	11.5	3983	3600	3491	3375	3067				
	0.33	990	12.2	4129	3762	3658	3550	3283				
	0.34	1000	12.5	4171	3809	3706	3599	3341				
1/3	0.36	1015	12.8	4233	3878	3776	3673	3428				
	0.38	1030	13.1	4296	3947	3847	3746	3512	3173			
	0.40	1050	13.5	4379	4038	3941	3842	3621	3312			
	0.47	1110	14.8	4629	4311	4221	4128	3933	3689			
	0.50	1125	15.1	4692	4378	4291	4199	4009	3776	3452		
1/2	0.55	1145	15.5	4775	4468	4383	4293	4108	3890	3593	2783	
	0.57	1160	15.9	4838	4536	4451	4364	4182	3973	3694	2959	
	0.60	1180	16.4	4921	4625	4543	4457	4280	4081	3822	3182	
	0.70	1260	18.3	5255	4981	4905	4827	4664	4493	4293	3875	
	0.75	1295	19.1	5401	5135	5062	4987	4829	4666	4484	4117	
3/4	0.79	1320	19.7	5505	5245	5174	5101	4947	4788	4616	4278	
	0.82	1335	20	5568	5311	5241	5169	5018	4861	4693	4371	
	0.90	1350	20	5630	5377	5308	5237	5088	4934	4770	4462	3538

PF7324 Belt Drive Performance Data

Model	Limits RPM	Limits Motor Frame	Panel OD SQ	Min. Wall Opening	Damper OD	Approx. Wt.
L1	1100	145T	30	31	28 1/2	90
L2	1145	145T				120

	Motor HP	Max BHP	Fan RPM	Sones (0" SP)	STATIC PRESSURE (INCHES W.G.) 0.000	0.100	0.125	0.150	0.200	0.250	0.300	0.375	0.500	0.625
LEVEL 1 CONSTRUCTION – MODEL PF 7324	1/4	0.25	555	9.0	4931	4168	3905	3574	2256					
		0.27	570	9.4	5065	4332	4085	3787	2460					
		0.30	600	10.2	5331	4652	4431	4180	3501	2269				
	1/3	0.33	625	10.9	5553	4912	4709	4482	3891					
		0.36	645	11.6	5731	5117	4926	4715	4187					
		0.41	660	12.1	5864	5268	5086	4885	4398	3702				
	1/2	0.50	715	14.0	6353	5815	5658	5487	5097	4592				
		0.54	735	14.7	6531	6011	5861	5699	5332	4877				
		0.58	750	15.3	6664	6157	6012	5856	5504	5081	4535			
		0.60	760	15.7	6753	6254	6112	5959	5617	5212	4686			
	3/4	0.75	820	17.9	7286	6831	6704	6570	6276	5941	5577			
		0.80	840	18.6	7464	7021	6898	6770	6489	6170	5804			
		0.85	855	19.1	7597	7163	7044	6918	6646	6340	5991	5316		
		0.90	875	19.8	7775	7352	7237	7116	6855	6562	6234	5600		
	1	1.00	905	21	8041	7635	7524	7409	7163	6890	6586	6040		
		1.10	935	22	8308	7916	7810	7700	7467	7211	6927	6437		
		1.20	950	22	8441	8057	7953	7845	7618	7369	7094	6625	5559	
	1 1/2	1.50	1035	25	9196	8847	8754	8658	8458	8244	8013	7628	6836	
		1.65	1070	27	9507	9170	9081	8989	8798	8595	8378	8019	7308	
		1.82	1100	28	9774	9447	9361	9272	9088	8894	8687	8347	7688	6808
LEVEL 2 CONSTRUCTION – MODEL PF 7324	1/4	0.25	540	9.9	5317	4075	3362	2733						
		0.27	555	10.9	5464	4290	3707	2948						
		0.30	575	12.2	5661	4559	4098	3307						
	1/3	0.33	590	13.2	5809	4753	4346	3647						
		0.36	605	14.3	5957	4943	4574	3995	2908					
		0.40	630	16.3	6203	5255	4926	4491	3247					
	1/2	0.50	670	17.9	6597	5740	5446	5116	3951	3168				
		0.57	685	18.5	6744	5917	5634	5326	4299	3364	2859			
		0.60	700	19	6892	6090	5822	5528	4645	3568	3043			
	3/4	0.75	740	21	7286	6543	6310	6042	5396	4220	3549	2883		
		0.80	765	22	7532	6816	6605	6354	5782	4786	3882	3186		
		0.86	795	23	7827	7138	6951	6724	6205	5455	4325	3555		
		0.90	815	24	8024	7350	7177	6964	6471	5827	4716	3807		
	1	1.00	855	26	8418	7772	7618	7432	6983	6460	5636	4337		
		1.05	870	27	8566	7930	7779	7604	7170	6677	5958	4551		
		1.11	890	28	8763	8139	7933	7831	7420	6953	6335	4853		
		1.20	910	29	8960	8347	8205	8055	7667	7220	6668	5246		
	1 1/2	1.50	975	33	9600	9021	8890	8756	8440	8045	7618	6707	4842	
		1.66	1015	35	9994	9434	9308	9180	8899	8542	8145	7416	5409	
		1.80	1045	38	10289	9742	9620	9496	9236	8905	8526	7880	5900	
	2	2.00	1075	41	10584	10050	9930	9811	9566	9260	8900	8300	6600	
		2.20	1115	46	10978	10459	10343	10229	9995	9724	9396	8848	7521	5700
		2.37	1145	51	11273	10766	10652	10540	10315	10065	9758	9237	8108	6204

Performance ratings do not include the effects of appurtenances (accessories). Power ratings (BHP) do not include transmission losses. Performance certified is for installation type A- free inlet, free outlet. The sound ratings shown are loudness values in fan sones at 5' (1.5m) in a hemispherical free field calculated per AMCA standard 301. Values shown are for installation Type A- free inlet fan sone levels. Due to air stream cooling, the motor leading into the service factor shown does not overhead the motor and is within NEMA recommended limits. BHP at most static pressure points is less than the maximum power shown- in many cases substantially less.

PF7330 Belt Drive Performance Data

Model	Limits RPM	Limits Motor Frame	Panel OD SQ	Min. Wall Opening	Damper OD	Approx. Wt.
L1	815	145T	36	37	34 1/2	100
L2	1070	182T				180

	Size	Motor HP	Max BHP	Fan RPM	Sones (0" SP)	STATIC PRESSURE (INCHES W.G.) 0.000	0.100	0.125	0.150	0.200	0.250	0.300	0.375	0.500
LEVEL 1 CONSTRUCTION	MODEL PF 7330	1/4	0.25	425	8.3	6956	5509	4962	4215					
			0.27	435	8.6	7119	5735	5212	4608					
			0.30	450	9.0	7365	6062	5572	5034					
		1/3	0.33	465	9.5	7610	6370	5922	5422					
			0.36	480	9.9	7856	6665	6270	5794					
			0.40	495	10.5	8101	6954	6603	6152	5073				
		1/2	0.50	535	12.0	8756	7709	7419	7074	6211				
			0.55	550	12.7	9001	7988	7709	7400	6586	5511			
			0.59	565	13.3	9247	8271	7995	7712	6949	6052			
		3/4	0.75	610	15.3	9983	9117	8839	8589	7995	7242	6351		
			0.82	630	16.2	10311	9487	9216	8968	8436	7728	6945		
			0.90	650	17.1	10638	9853	9594	9343	8857	8198	7473		
		1	1.00	670	18.0	10965	10216	9969	9716	9253	8665	7978	6549	
			1.11	695	19.3	11375	10665	10434	10188	9738	9228	8581	7501	
			1.20	715	20	11702	11021	10802	10565	10120	9659	9098	8052	
		1 1/2	1.50	770	23	12602	11990	11798	11589	11151	10752	10298	9427	
			1.63	790	23	12929	12339	12156	11956	11526	11135	10723	9899	8281
			1.78	815	24	13339	12773	12599	12411	12000	11609	11223	10482	9013
LEVEL 2 CONSTRUCTION	MODEL PF 7330	1/3	0.33	480	9.7	7675	6417	5879	5284					
			0.36	495	10.3	7915	6706	6243	5678					
			0.40	505	10.7	8075	6895	6481	5932	4378				
		1/2	0.50	550	12.6	8794	7720	7432	7025	5986				
			0.56	570	13.6	9114	8078	7809	7479	6516				
			0.60	585	14.4	9354	8345	8087	7799	6896				
		1/4	0.75	630	17.6	10073	9146	8902	8659	7991	7096			
			0.83	650	18.4	10393	9499	9258	9026	8455	7609	6642		
			0.90	670	19.2	10713	9850	9614	9390	8890	8101	7200		
		1	1.00	685	19.9	10953	10112	9882	9659	9194	8460	7638	5700	
			1.10	710	21	11352	10546	10325	10106	9672	9068	8284	6802	
			1.20	735	22	11752	10978	10766	10550	10137	9637	8900	7679	
		1 1/2	1.50	795	25	12711	12004	11812	11615	11226	10836	10331	9292	
			1.65	820	26	13111	12428	12243	12054	11672	11302	10876	9908	
			1.80	845	27	13511	12851	12673	12490	12116	11760	11378	10510	
		2	2.00	875	29	13991	13356	13185	13010	12651	12303	11948	11233	9600
			2.22	905	31	14470	13859	13696	13528	13183	12840	12504	11907	10399
			2.40	930	32	14870	14278	14119	13957	13623	13284	12961	12435	11029
		3	3.00	1005	37	16069	15525	15381	15234	14930	14618	14308	13855	12846
			3.30	1040	41	16629	16105	15967	15825	15534	15235	14930	14495	13600
			3.60	1070	44	17109	16601	16467	16330	16049	15761	15465	15038	14279

Performance ratings do not include the effects of appurtenances (accessories). Power ratings (BHP) do not include transmission losses. Performance certified is for installation type A- free inlet, free outlet. The sound ratings shown are loudness values in fan sones at 5' (1.5m) in a hemispherical free field calculated per AMCA standard 301. Values shown are for installation Type A- free inlet fan sone levels. Due to air stream cooling, the motor leading into the service factor shown does not overhead the motor and is within NEMA recommended limits. BHP at most static pressure points is less than the maximum power shown- in many cases substantially less.

PF7330 Belt Drive Performance Data cont.

Model	Limits RPM	Limits Motor Frame	Panel OD SQ	Min. Wall Opening	Damper OD	Approx. Wt.
L1	695	145T	42	43	40 1/2	105
L2	845	184T				215

	Size	Motor HP	Max BHP	Fan RPM	Sones (0" SP)	STATIC PRESSURE (INCHES W.G.) 0.000	0.100	0.125	0.150	0.200	0.250	0.300	0.375	0.500
LEVEL 1 CONSTRUCTION	MODEL PF 7330	1/4	0.25	425	8.3	6956	5509	4962	4215					
			0.27	435	8.6	7119	5735	5212	4608					
			0.30	450	9.0	7365	6062	5572	5034					
		1/3	0.33	465	9.5	7610	6370	5922	5422					
			0.36	480	9.9	7856	6665	6270	5794					
			0.40	495	10.5	8101	6954	6603	6152	5073				
		1/2	0.50	535	12.0	8756	7709	7419	7074	6211				
			0.55	550	12.7	9001	7988	7709	7400	6586	5511			
			0.59	565	13.3	9247	8271	7995	7712	6949	6052			
		3/4	0.75	610	15.3	9983	9117	8839	8589	7995	7242	6351		
			0.82	630	16.2	10311	9487	9216	8968	8436	7728	6945		
			0.90	650	17.1	10638	9853	9594	9343	8857	8198	7473		
		1	1.00	670	18.0	10965	10216	9969	9716	9253	8665	7978	6549	
			1.11	695	19.3	11375	10665	10434	10188	9738	9228	8581	7501	
			1.20	715	20	11702	11021	10802	10565	10120	9659	9098	8052	
		1 1/2	1.50	770	23	12602	11990	11798	11589	11151	10752	10298	9427	
			1.63	790	23	12929	12339	12156	11956	11526	11135	10723	9899	8281
			1.78	815	24	13339	12773	12599	12411	12000	11609	11223	10482	9013
LEVEL 2 CONSTRUCTION	MODEL PF 7330	1/3	0.33	480	9.7	7675	6417	5879	5284					
			0.36	495	10.3	7915	6706	6243	5678					
			0.40	505	10.7	8075	6895	6481	5932	4378				
		1/2	0.50	550	12.6	8794	7720	7432	7025	5986				
			0.56	570	13.6	9114	8078	7809	7479	6516				
			0.60	585	14.4	9354	8345	8087	7799	6896				
		1/4	0.75	630	17.6	10073	9146	8902	8659	7991	7096			
			0.83	650	18.4	10393	9499	9258	9026	8455	7609	6642		
			0.90	670	19.2	10713	9850	9614	9390	8890	8101	7200		
		1	1.00	685	19.9	10953	10112	9882	9659	9194	8460	7638	5700	
			1.10	710	21	11352	10546	10325	10106	9672	9068	8284	6802	
			1.20	735	22	11752	10978	10766	10550	10137	9637	8900	7679	
		1 1/2	1.50	795	25	12711	12004	11812	11615	11226	10836	10331	9292	
			1.65	820	26	13111	12428	12243	12054	11672	11302	10876	9908	
			1.80	845	27	13511	12851	12673	12490	12116	11760	11378	10510	
		2	2.00	875	29	13991	13356	13185	13010	12651	12303	11948	11233	9600
			2.22	905	31	14470	13859	13696	13528	13183	12840	12504	11907	10399
			2.40	930	32	14870	14278	14119	13957	13623	13284	12961	12435	11029
		3	3.00	1005	37	16069	15525	15381	15234	14930	14618	14308	13855	12846
			3.30	1040	41	16629	16105	15967	15825	15534	15235	14930	14495	13600
			3.60	1070	44	17109	16601	16467	16330	16049	15761	15465	15038	14279

Performance ratings do not include the effects of appurtenances (accessories). Power ratings (BHP) do not include transmission losses. Performance certified is for installation type A- free inlet, free outlet. The sound ratings shown are loudness values in fan sones at 5' (1.5m) in a hemispherical free field calculated per AMCA standard 301. Values shown are for installation Type A- free inlet fan sone levels. Due to air stream cooling, the motor leading into the service factor shown does not overhead the motor and is within NEMA recommended limits. BHP at most static pressure points is less than the maximum power shown- in many cases substantially less.

PF7336 Belt Drive Performance Data

Limits			Panel OD SQ	Min. Wall Opening	Damper OD	Approx. Wt.
Model	RPM	Motor Frame				
L1	695	145T	42	43	40 1/2	105
L2	845	184T				215

	Size	Motor HP	Max BHP	Fan RPM	Sones (0" SP)	STATIC PRESSURE (INCHES W.G.) 0.000	0.100	0.125	0.150	0.200	0.250	0.300	0.375	0.500	.625	.750
LEVEL 1 CONSTRUCTION	MODEL PF 7336	1/3	0.33	360	8.5	9927	7580	6735	5537	-	-	-	-	-	-	-
			0.35	370	8.9	10203	7973	7153	6222	-	-	-	-	-	-	-
			0.41	390	9.7	10755	8745	7976	7190	-	-	-	-	-	-	-
		½	0.50	415	10.8	11444	9631	8967	8237	6333	-	-	-	-	-	-
			0.55	430	11.5	11858	10126	9550	8849	7340	-	-	-	-	-	-
			0.59	440	11.9	12133	10449	9923	9248	7840	-	-	-	-	-	-
		¾	0.75	475	13.7	13098	11556	11133	10611	9337	7872	-	-	-	-	-
			0.82	490	14.5	13512	12022	11620	11162	9954	8675	-	-	-	-	-
			0.90	505	15.3	13926	12485	12100	11686	10557	9348	7384	-	-	-	-
		1	1.00	525	16.4	14477	13103	12731	12348	11345	10187	8897	-	-	-	-
			1.09	540	17.3	14891	13562	13199	12834	11930	10809	9653	-	-	-	-
			1.19	555	18.1	15305	14018	13663	13312	12495	11419	10317	-	-	-	-
		1 ½	1.50	600	20	16545	15373	15048	14720	14055	13195	12186	10619	-	-	-
			1.58	610	21	16821	15671	15353	15029	14381	13577	12590	11076	-	-	-
			1.79	635	22	17511	16413	16111	15801	15186	14497	13578	12146	-	-	-
		2	2.00	655	23	18062	17003	16713	16415	15819	15189	14366	12975	9909	-	-
			2.22	680	24	18751	17737	17461	17177	16600	16014	15313	13996	11612	-	-
			2.37	695	2519	1651	8176	17907	176311	7065	16499	15859	14594	12363	-	-
LEVEL 2 CONSTRUCTION	MODEL PF 7336	½	0.49	410	11.5	10401	9012	8530	7939	6101	3751	2429	-	-	-	-
			0.52	420	11.9	10655	9315	8862	8318	6704	4304	2801	-	-	-	-
			0.56	430	12.4	10908	9615	9187	8682	7248	4924	3207	-	-	-	-
		¾	0.74	470	14.5	11923	10781	10428	10030	9033	7519	5326	3148	-	-	-
			0.83	490	15.6	12430	11349	11024	10663	9790	8565	6673	3997	-	-	-
			0.88	500	16.1	12684	11631	11317	10971	10148	9030	7335	4483	-	-	-
		1	1.02	520	17.3	13191	12189	11896	11578	10836	9880	8524	5609	2815	-	-
			1.12	540	18.5	13699	12742	12467	12171	11495	10656	9537	6926	3530	-	-
			1.17	550	19.1	13952	13017	12750	12464	11815	11024	9994	7606	3926	-	-
		1 ½	1.48	590	22	14967	14106	13867	13613	13054	12403	11615	9987	5858	3443	-
			1.6	610	23	15474	14646	14418	14178	13654	13053	12345	10952	7086	4191	-
			1.83	630	24	15982	15183	14966	14738	14243	13685	13040	11820	8438	5041	3220
		2	1.97	650	25	16489	15718	15510	15292	14824	14302	13708	12619	9756	6021	3903
			2.12	670	27	16997	16251	16051	15843	15399	14907	14356	13370	10932	7161	4662
			2.3	690	28	17504	16782	16590	16391	15967	15502	14987	14084	11969	8455	5516
		3	2.84	740	31	18772	18102	17927	17746	17366	16956	16511	15758	14158	11709	8221
			3.14	765	33	19407	18759	18592	18419	18057	17669	17251	16554	15119	13062	9885
			3.53	795	35	20168	19546	19386	19222	18879	18514	18125	17483	16202	14476	11880
		5	4.86	890	43	22578	22023	21883	21741	21447	21139	20816	20298	19323	18155	16676
			5.33	920	46	23339	22801	22667	22531	22249	21955	21648	21158	20249	19182	17876
			5.66	940	48	23846	23320	23189	23056	22782	22497	22199	21727	20856	19845	18631

Performance ratings do not include the effects of appurtenances (accessories). Power ratings (BHP) do not include transmission losses. Performance certified is for installation type A- free inlet, free outlet. The sound ratings shown are loudness values in fan sones at 5' (1.5m) in a hemispherical free field calculated per AMCA standard 301. Values shown are for installation Type A- free inlet fan sone levels. Due to air stream cooling, the motor leading into the service factor shown does not overhead the motor and is within NEMA recommended limits. BHP at most static pressure points is less than the maximum power shown- in many cases substantially less.

PF7342 Belt Drive Performance Data

Model	Limits RPM	Limits Motor Frame	Panel OD SQ	Min. Wall Opening	Damper OD	Approx. Wt.
L1	550	145T				110
L2	745	184T	48	49	46 1/2	235
L3	850	213T				260

	Size	Motor HP	Max BHP	Fan RPM	Sones (0" SP)	STATIC PRESSURE (INCHES W.G.) 0.000	0.100	0.125	0.150	0.200	0.250	0.300	0.375	0.500	.625	.750
LEVEL 1 CONSTRUCTION	MODEL PF 7342	1/3	0.33	285	8.3	12309	8342	6281	-	-	-	-	-	-	-	-
			0.37	295	8.3	12741	8967	7579	-	-	-	-	-	-	-	-
			0.41	305	8.4	13173	9658	8439	5438	-	-	-	-	-	-	-
		½	0.5	325	8.8	14037	10969	9725	8483	-	-	-	-	-	-	-
			0.54	335	9.3	14469	11549	10380	9305	-	-	-	-	-	-	-
			0.6	345	9.8	14901	12109	11073	9960	-	-	-	-	-	-	-
		¾	0.75	375	11.4	16197	13705	12938	11928	9768	-	-	-	-	-	-
			0.83	385	12	16629	14218	13498	12606	10619	-	-	-	-	-	-
			0.9	395	12.6	17060	14724	14044	13252	11285	7292	-	-	-	-	-
		1	1	410	13.4	17708	15474	14842	14128	12233	9895	-	-	-	-	-
			1.11	425	14.3	18356	16214	15618	14966	13217	11433	6467	-	-	-	-
			1.2	435	14.9	18788	16703	16128	15508	13911	12182	8485	-	-	-	-
		1 ½	1.5	470	16.9	20300	18400	17874	17336	16118	14419	12885	-	-	-	-
			1.65	485	17.9	20948	19119	18609	18095	16964	15460	13900	9198	-	-	-
			1.81	500	18.8	21596	19833	19339	18845	17784	16470	14848	11827	-	-	-
		2	2	515	19.8	22243	20543	20067	19587	18583	17410	15805	13517	-	-	-
			2.22	535	21	23107	21482	21029	20566	19623	18561	17190	15068	-	-	-
			2.4	550	22	23755	22182	21746	21295	20388	19393	18190	16034	-	-	-
LEVEL 2 CONSTRUCTION	MODEL PF 7342	1/3	0.33	285	7.8	10509	7477	5671	3612	-	-	-	-	-	-	-
			0.36	290	8	10694	7789	6342	4014	-	-	-	-	-	-	-
			0.4	300	8.1	11062	8381	7206	4906	-	-	-	-	-	-	-
		½	0.5	325	8.9	11984	9671	8755	7643	-	-	-	-	-	-	-
			0.55	335	9.4	12353	10149	9347	8304	-	-	-	-	-	-	-
			0.6	345	10	12722	10621	9901	8910	-	-	-	-	-	-	-
		¾	0.75	370	11.5	13644	11823	11131	10411	8367	-	-	-	-	-	-
			0.84	385	12.4	14197	12521	11841	11206	9474	6112	-	-	-	-	-
			0.9	395	13	14566	12972	12316	11697	10087	7124	-	-	-	-	-
		1	1	405	13.7	14934	13406	12803	12178	10697	8279	-	-	-	-	-
			1.1	420	14.6	15487	14041	13516	12889	11606	9898	6533	-	-	-	-
			1.2	435	15.7	16041	14664	14206	13604	12449	10877	8053	-	-	-	-
		1 ½	1.5	470	18	17331	16089	15716	15265	14174	13001	11506	7343	-	-	-
			1.66	485	19	17884	16689	16339	15942	14884	13846	12428	8858	-	-	-
			1.81	495	19.6	18253	17088	16750	16375	15354	14366	13037	9983	-	-	-
		2	2	515	21	18990	17880	17564	17222	16325	15345	14250	12166	-	-	-
			2.24	535	22	19728	18666	18369	18052	17271	16299	15368	13458	-	-	-
			2.42	550	23	20281	19253	18969	18666	17959	17006	16121	14360	9183	-	-
		3	3	590	26	21756	20806	20549	20280	19690	18928	18041	16738	13692	8037	-
			3.33	610	27	22494	21578	21333	21077	20524	19855	18985	17781	15060	9786	6188
			3.6	625	28	23047	22156	21918	21671	21141	20531	19717	18517	15977	11312	7195
		5	5	700	34	25812	25024	24818	24606	24164	23687	23156	22103	20314	17936	14112
			5.52	720	36	26550	25785	25586	25382	24957	24503	24005	23060	21299	19163	16540
			6.07	745	38	27472	26734	26542	26347	25942	25513	25049	24222	22500	20666	18311
Level 3	MODEL PF 7342	7 1/2	7.5	800	43	29500	28816	28639	28460	28091	27705	27298	26628	25120	23570	21683
			8.17	825	46	30422	29759	29589	29416	29061	28692	28305	27676	26325	24778	23147
			8.93	850	48	31344	30701	30537	30369	30027	29673	29304	28710	27497	25965	24512

Performance ratings do not include the effects of appurtenances (accessories). Power ratings (BHP) do not include transmission losses. Performance certified is for installation type A- free inlet, free outlet. The sound ratings shown are loudness values in fan sones at 5' (1.5m) in a hemispherical free field calculated per AMCA standard 301. Values shown are for installation Type A- free inlet fan sone levels. Due to air stream cooling, the motor leading into the service factor shown does not overhead the motor and is within NEMA recommended limits. BHP at most static pressure points is less than the maximum power shown- in many cases substantially less.

PF7348 Belt Drive Performance Data

Model	Limits RPM	Limits Motor Frame	Panel OD SQ	Min. Wall Opening	Damper OD	Approx. Wt.
L1	455	145T				125
L2	605	184T	54	55	52 1/2	300
L3	765	215T				330

	Size	Motor HP	Max BHP	Fan RPM	Sones (0" SP)	STATIC PRESSURE (INCHES W.G.) 0.000	0.100	0.125	0.150	0.200	0.250	0.300	0.375	0.500	.625	.750
LEVEL 1 CONSTRUCTION	MODEL PF 7348	½	0.5	270	9.5	16739	11961	9933	-	-	-	-	-	-	-	-
			0.56	280	9.7	17359	12936	11133	6659	-	-	-	-	-	-	-
			0.62	290	10	17979	13841	12199	10077	-	-	-	-	-	-	-
		¾	0.69	300	10.4	18599	14684	13193	11413	-	-	-	-	-	-	-
			0.75	310	10.9	19219	15459	14171	12556	-	-	-	-	-	-	-
			0.83	320	11.6	19839	16210	15101	13600	-	-	-	-	-	-	-
		1	0.91	330	12.1	20459	16949	15969	14584	10759	-	-	-	-	-	-
			1	340	12.7	21079	17678	16778	15563	12363	-	-	-	-	-	-
			1.09	350	13.4	21699	18411	17542	16493	13606	-	-	-	-	-	-
		1 ½	1.14	355	13.7	22009	18777	17917	16936	14174	-	-	-	-	-	-
			1.23	365	14.3	22629	19504	18659	17784	15243	10868	-	-	-	-	-
			1.5	390	15.9	24179	21296	20488	19711	17720	15058	-	-	-	-	-
		2	1.63	400	16.7	24799	22004	21219	20452	18668	16187	11973		-	-	-
			1.82	415	17.8	25729	23054	22306	21548	19994	17746	14950		-	-	-
			2	430	18.9	26659	24093	23381	22647	21217	19215	16819		-	-	-
LEVEL 2 CONSTRUCTION	MODEL PF 7348	½	2.16	440	19.6	27279	24779	24091	23377	21983	20194	17929		-	-	-
			2.39	455	21	28209	25800	25148	24463	23107	21574	19479	15382	-	-	-
		¾	0.51	265	8.9	14897	11015	9603	7178	-	-	-	-	-	-	-
			0.55	270	9.1	15178	11448	10050	8090	-	-	-	-	-	-	-
			0.6	280	9.3	15740	12285	10907	9442	-	-	-	-	-	-	-
			0.69	295	10.1	16584	13462	12204	10941	-	-	-	-	-	-	-
		1	0.75	300	10.4	16865	13840	12639	11376	7002	-	-	-	-	-	-
			0.82	310	11.2	17427	14578	13485	12223	9041	-	-	-	-	-	-
			0.9	320	11.9	17989	15300	14290	13092	10504	-	-	-	-	-	-
		1 ½	0.93	325	12.2	18270	15656	14681	13530	11096	-	-	-	-	-	-
			1	335	13	18832	16352	15443	14388	12128	7739	-	-	-	-	-
			1.13	345	13.8	19394	17033	16183	15213	13014	9825	-	-	-	-	-
		2	1.23	355	14.6	19957	17701	16908	16003	13866	11386	-	-	-	-	-
			1.5	380	16.4	21362	19320	18656	17879	16032	14051	11129	-	-	-	-
			1.68	395	17.5	22205	20262	19664	18958	17294	15342	13239	-	-	-	-
		3	1.8	405	18.2	22767	20884	20322	19661	18094	16184	14339	-	-	-	-
			2	420	19.4	23611	21808	21293	20689	19252	17504	15719	-	-	-	-
			2.2	430	20	24173	22419	21926	21361	20000	18365	16577	13276	-	-	-
		5	2.4	445	21	25016	23331	22864	22350	21095	19608	17847	15192	-	-	-
			3	480	24	26983	25436	25020	24580	23553	22305	20871	18470	12309	-	-
			3.36	495	25	27827	26331	25932	25514	24564	23402	22080	19734	15092	-	-
LEVEL 3 CONSTRUCTION	MODEL PF 7348	7 ½	3.62	510	27	28670	27222	26838	26439	25556	24479	23245	21054	17098		-
			5	565	31	31762	30464	30127	29781	29053	28231	27262	25589	22235	18481	-
			5.44	585	33	32886	31635	31311	30980	30290	29535	28650	27105	23969	20741	-
		10	6.13	605	35	34010	32802	32491	32174	31516	30811	30001	28571	25707	22582	14450
			7.5	650	40	36540	35419	35132	34841	34243	33616	32945	31753	29362	26441	23603
			8.11	670	42	37664	36578	36300	36020	35444	34844	34209	33113	30886	28190	25367

Performance ratings do not include the effects of appurtenances (accessories). Power ratings (BHP) do not include transmission losses. Performance certified is for installation type A- free inlet, free outlet. The sound ratings shown are loudness values in fan sones at 5' (1.5m) in a hemispherical free field calculated per AMCA standard 301. Values shown are for installation Type A- free inlet fan sone levels. Due to air stream cooling, the motor leading into the service factor shown does not overhead the motor and is within NEMA recommended limits. BHP at most static pressure points is less than the maximum power shown- in many cases substantially less.

PF7354 Belt Drive Performance Data

Model	Limits RPM	Limits Motor Frame	Panel OD SQ	Min. Wall Opening	Damper OD	Approx. Wt.
L1	425	182T				240
L2	515	184T	60	61	58 1/2	400
L3	740	254T				500

	Size	Motor HP	Max BHP	Fan RPM	Sones (0" SP)	STATIC PRESSURE (INCHES W.G.) 0.000	0.125	0.150	0.200	0.250	0.300	0.375	0.500	.625	.750
LEVEL 1 CONSTRUCTION	MODEL PF 7354	¾	0.75	250	9.8	21652	14977	10311							
			0.82	260	10.4	22518	16507	13479							
			0.92	270	11	23384	17932	15352	10232						
		1	1	275	11.4	23817	18559	16095	11620						
			1.09	285	12.3	24683	19720	17561	14816						
			1.2	295	13.1	25550	20825	19097	16699						
		1 ½	1.5	315	14.8	27282	22932	21633	19683	12699					
			1.61	325	15.5	28148	23950	22757	21183	15785					
			1.84	340	16.8	29447	25449	24372	23109	19183					
		2	2	350	17.7	30313	26434	25414	24259	20671	13599				
			2.19	360	18.5	31179	27408	26437	25365	22133	16456				
			2.38	370	19.4	32045	28375	27445	26439	23692	19651				
		3	3	400	22	34643	31236	30401	29530	27543	24351	20039			
			3.35	415	23	35943	32648	31852	31029	29213	26686	23274			
			3.6	425	24	36809	33585	32812	32015	30290	28100	24785	15677		
LEVEL 2 CONSTRUCTION	MODEL PF 7354	1	1	280	12.9	22680	17068	15430	10747						
			1.08	290	12.8	23490	18289	16585	13352						
			1.2	300	13.3	24300	19435	17847	14940						
		1 ½	1.5	325	14.7	26325	22071	20881	18012	15063					
			1.66	335	15.3	27135	23051	21991	19167	16645					
			1.82	345	15.9	27945	24009	23055	20429	17977	13943				
		2	2	355	16.5	28755	24951	24076	21693	19167	16320				
			2.14	370	17.4	29970	26337	25543	23506	20904	18665				
			2.42	380	18.1	30780	27250	26496	24642	22110	19943	12875			
		3	3	405	19.8	32805	29495	28822	27307	25251	22863	19592			
			3.26	420	21	34020	30816	30188	28793	27006	24696	21705			
			3.63	435	22	35235	32123	31538	30237	28662	26595	23500			
		5	5	485	27	39285	36430	35924	34861	33677	32300	29567	25066		
			5.35	495	28	40095	37284	36789	35763	34624	33339	30803	26276	19008	
			6.04	515	29	41715	38988	38510	37550	36487	35323	33144	28610	24012	
LEVEL 3 CONSTRUCTION	MODEL PF 7354	7 ½	6.94	540	31	43740	41110	40651	39742	38772	37717	35876	31600	27746	19763
			7.50	555	33	44955	42378	41930	41046	40126	39121	37436	33508	29564	24604
			8.60	580	35	46980	44488	44055	43206	42356	41424	39902	36579	32473	28797
		10	10.00	610	38	49410	47011	46594	45782	44978	44138	42758	39973	36128	32626
			11.06	630	40	51030	48690	48283	47491	46713	45923	44619	42105	38653	34954
			12.15	650	42	52650	50364	49967	49195	48439	47682	46454	44142	41077	37264
		15	15.00	700	48	56700	54541	54164	53434	52725	52024	50955	48962	46617	43558
			16.45	720	51	58320	56207	55837	55123	54430	53747	52721	50830	48684	45923
			17.85	740	53	59940	57872	57509	56809	56130	55464	54469	52675	50659	48179

Performance ratings do not include the effects of appurtenances (accessories). Power ratings (BHP) do not include transmission losses. Performance certified is for installation type A- free inlet, free outlet. The sound ratings shown are loudness values in fan sones at 5' (1.5m) in a hemispherical free field calculated per AMCA standard 301. Values shown are for installation Type A- free inlet fan sone levels. Due to air stream cooling, the motor leading into the service factor shown does not overhead the motor and is within NEMA recommended limits. BHP at most static pressure points is less than the maximum power shown- in many cases substantially less.

PF7360 Belt Drive Performance Data

Model	Limits RPM	Limits Motor Frame	Panel OD SQ	Min. Wall Opening	Damper OD	Approx. Wt.
L1	380	182T				285
L2	460	184T	66	67	64 1/2	490
L3	700	256T				530

	Size	Motor HP	Max BHP	Fan RPM	Sones (0.00" SP)	STATIC PRESSURE (INCHES W.G.) 0.00	0.125	0.150	0.200	0.250	0.375	0.500	.625	.750	1.00
LEVEL 1 CONSTRUCTION	MODEL PF 7360	1	1	250	10.3	26878	20089	16672							
			1.08	255	10.7	27416	20835	18009							
			1.21	265	11.5	28491	22275	20109							
		1 ½	1.5	285	13	30641	25041	23280	20999						
			1.69	295	13.9	31717	26369	24721	22844						
			1.75	300	14.3	32254	27023	25433	23649						
		2	2	310	15.1	33329	28317	26824	25176	18811					
			2.23	325	16.3	34942	30222	28846	27344	23361					
			2.44	335	17.1	36017	31464	30159	28751	25399					
		3	3.03	360	19.1	38705	34490	33367	32125	29373	25314				
			3	370	20	39780	35672	34618	33430	30822	27531				
			4	380	21	40855	36826	35849	34723	32244	29351				
LEVEL 2 CONSTRUCTION	MODEL PF 7360	1	1	250	9.9	25631	17744	15842							
			1.08	260	10.6	26656	19351	17368							
			1.21	270	11.3	27681	20986	18860	15136						
		1 ½	1.5	290	12.7	29732	23756	22062	18500						
			1.67	300	13.4	30757	25033	23639	20021	16501					
			1.83	310	14.2	31782	26280	25017	21513	18376					
		2	2	320	15	32808	27513	26324	23013	20017					
			2.11	325	15.4	33320	28131	26963	23823	20803					
			2.22	330	15.8	33833	28744	27594	24667	21569					
		3	3	365	19	37421	32929	31915	29813	26912	19530				
			3.38	380	20	38959	34674	33724	31731	29390	22561				
			3.64	390	21	39984	35821	34914	32979	30912	24209				
		5	5.00	435	25	44598	40862	40121	38488	36744	31031	25399			
			5.60	450	26	46136	42519	41809	40275	38594	33461	27901			
			5.98	460	27	47161	43618	42926	41454	39830	35125	29479			
LEVEL 3 CONSTRUCTION	MODEL PF 7360	7 ½	7.03	485	29	49724	46353	45700	44359	42869	38864	33248	28162		
			7.5	495	30	50749	47441	46803	45502	44065	40196	34740	29870		
			7.91	505	31	51774	48527	47902	46633	45252	41497	36241	31497		
			9.09	530	34	54338	51231	50636	49437	48180	44658	40368	35343	30623	
		10	10.00	545	35	55875	52847	52268	51107	49912	46512	42747	37583	33176	
			10.78	560	37	57413	54459	53895	52767	51617	48365	44872	39824	35577	
			11.98	580	39	59464	56603	56058	54969	53868	50812	47513	43039	38629	
		15	15.00	625	44	64077	61406	60896	59886	58874	56189	53177	50021	45397	37596
			16.48	645	47	66128	63532	63037	62056	61078	58529	55646	52673	48763	40825
			17.98	665	49	68178	65654	65173	64219	63271	60843	58098	55240	51973	43894

Performance ratings do not include the effects of appurtenances (accessories). Power ratings (BHP) do not include transmission losses. Performance certified is for installation type A- free inlet, free outlet. The sound ratings shown are loudness values in fan sones at 5' (1.5m) in a hemispherical free field calculated per AMCA standard 301. Values shown are for installation Type A- free inlet fan sone levels. Due to air stream cooling, the motor leading into the service factor shown does not overhead the motor and is within NEMA recommended limits. BHP at most static pressure points is less than the maximum power shown- in many cases substantially less.

PF7372 Belt Drive Performance Data

Limits			Panel OD SQ	Min. Wall Opening	Damper OD	Approx. Wt.
Model	RPM	Motor Frame				
L3	545	256T	80	81	78 1/2	600

LEVEL 3 CONSTRUCTION

Size	Motor HP	Max BHP	Fan RPM	Sones (0.00" SP)	STATIC PRESSURE (INCHES W.G.) 0.00	0.125	0.200	0.250	0.300	0.375	0.500	.625	.750	1.00
MODEL PF 7360	1 ½	1.29	225	22	35129	20805	-	-	-	-	-	-	-	-
		1.5	235	23	36690	23490	11736	-	-	-	-	-	-	-
		1.77	250	25	39032	28557	16766	-	-	-	-	-	-	-
	2	2	260	27	40593	30797	19872	12185	-	-	-	-	-	-
		2.23	270	28	42154	33105	22720	15591	-	-	-	-	-	-
		2.36	275	29	42935	34370	23988	17268	-	-	-	-	-	-
	3	3	295	34	46058	38778	28928	23480	16818	-	-	-	-	-
		3.22	305	36	47619	40624	32722	26224	20149	-	-	-	-	-
		3.54	315	39	49180	42421	35839	28644	23303	-	-	-	-	-
	5	4.26	335	44	52303	45927	40304	34243	28943	20547	-	-	-	-
		5	350	48	54645	48505	44011	39490	32581	25385	-	-	-	-
		5.98	375	56	58548	52752	49397	45162	40602	32470	19719	-	-	-
	7	6.44	385	60	60109	54439	52140	47621	43710	34888	23115	-	-	-
		7.50	405	64	63232	57793	54820	52395	48197	39949	29577	17215	-	-
		8.71	425	67	66354	61123	58310	56291	52989	47294	35402	24005	-	-
	10	10	445	69	69477	64435	61744	59908	57687	52162	40392	30620	19305	-
		11.04	460	71	71819	66908	64294	62555	60633	55471	44092	35242	24397	-
		12.15	475	74	74160	69373	66838	65165	63387	59202	48920	39535	29471	-
	15	15	510	79	79625	75100	72720	71154	69590	66984	59376	48219	40396	-
		16.41	525	81	81967	77547	75223	73700	72190	69767	62695	52353	44585	26079
		18.36	545	85	85089	80799	78545	77078	75619	73370	67480	59891	49467	32867

Performance ratings do not include the effects of appurtenances (accessories). Power ratings (BHP) do not include transmission losses. Performance certified is for installation type A- free inlet, free outlet. The sound ratings shown are loudness values in fan sones at 5' (1.5m) in a hemispherical free field calculated per AMCA standard 301. Values shown are for installation Type A- free inlet fan sone levels. Due to air stream cooling, the motor leading into the service factor shown does not overhead the motor and is within NEMA recommended limits. BHP at most static pressure points is less than the maximum power shown- in many cases substantially less.

PF7100 Direct Drive Axial Wall Fan Guide Specification

1.1. **DESCRIPTION**
Furnish and Install Model 7100 Direct Drive Propeller Wall Fan and accessories as indicated on drawings.

1.2. QUALITY ASSURANCE
MOFFITT (Jacksonville, FL, 1 800-474-3267) Products establish the standard of quality required. Manufacturer and erector shall demonstrate a minimum of five (5) years of related industry experience.

1.3. SUBSTITUTIONS
No substitutions will be considered unless written request for approval has been submitted by the bidder and has been received by the designer at least ten (10) days prior to bid date. Any proposed substitutions should meet the standards set by specification.

1.4. SUBMITTALS
Furnish approval drawings prior to fabrication; and erection drawings prior to shipment showing all erection procedures and accessories required for the specified product.

2.1. DESIGN
Propeller Wall Fan shall be heavy duty axial type oriented for exhaust or supply with accessories as indicated on fan schedule. Drive shall be direct drive. Fan shall be rated and tested per AMCA standards for air and sound performance.

2.2. CONSTRUCTION
- 2.2.1. Panel to be constructed of G90 galvanized steel –16ga for 24” to 48” or 14ga for 54” and 60” with precision one-piece spun venturi, and pre-punched mounting holes. Motor support structure to be welded schedule 40 galvanized pipe.
- 2.2.2. Propeller to be extruded or cast aluminum airfoil blades on steel hub plate with taper lock bushing and mounted directly on the motor shaft propeller to be statically and dynamically balanced at the factory prior to shipping. Motor to be open drip-proof with permanently lubricated sealed ball bearings. Nationally recognized brand and locally serviceable. Minimum 1/3 hp.
- 2.2.3. Fan to be completely assembled at factory and tested prior to shipment.

2.3. ACCESSORIES (Select as required)
- 2.4. Wall Housing to be heavy gauge G90 galvanized steel of standard length to accommodate selected accessories.
- 2.5. Automatic Back draft Damper – Gravity for Exhaust Applications Only.
- 2.6. 115vac Motorized Damper – Power Open, Spring Close
- 2.7. Motor to be Totally Enclosed Model (2 Speed; Explosion Proof)
- 2.8. Rain hood to be G90 galvanized steel. 45 degree for exhaust application. 90 degree for supply applications. Hood to include galvanized screen guard. Guard screens to be OSHA approved ½ “x 1” 16 ga galvanized. (1/2” x ½” expanded aluminum; ¾” x ¾” expanded aluminum).
- 2.9. Extended lube lines to be provided to motor bearings. NEMA__ Disconnect Switch to be provided.
- 2.10. Aluminum Construction to be provided for fan, housing, damper, hood and guards.
- 2.11. Fan panel (housing; damper; rain hood) to be air dry epoxy coated. Color to match color chip.
- 2.12. Fan panel (housing; damper; rain hood) to be painted with polyester resin. Color to matchcolor chip.
- 2.13. Fan panel (housing; damper; rain hood) to have phenolic coating.

3.1. INSPECTION
Examine wall surface prior to installation. Check that support structure is in place before installing housing/collar. Make sure surface is clear of debris to ensure proper adhesion of caulking material between vent housing/collar and surface where required.

3.2. INSTALLATION AND ERECTION
Install Model 7100 Direct Drive Propeller Wall Fan and Accessories in conformance with approved drawings and MOFFITT specifications. Any necessary hardware and caulking for ventilator shall be included with units. Any additional material to be provided by installing contractor.

3.3. DAMGED MATERIAL
Repair or replace all damaged material.

PF7300 Belt Drive - Level 1 Axial Wall Fan Guide Specification

1.1. **DESCRIPTION**
Furnish and Install Model 7300 Belt Drive-Level 1 Propeller Wall Fan and accessories as indicated on drawings.

1.2. QUALITY ASSURANCE
MOFFITT (Jacksonville, FL, 1 800-474-3267) Products establish the standard of quality required. Manufacturer and erector shall demonstrate a minimum of five (5) years of related industry experience.

1.3. SUBSTITUTIONS
No substitutions will be considered unless written request for approval has been submitted by the bidder and has been received by the designer at least ten (10) days prior to bid date. Any proposed substitutions should meet the standards set by specification.

1.4. SUBMITTALS
Furnish approval drawings prior to fabrication; and erection drawings prior to shipment showing all erection procedures and accessories required for the specified product.

2.1. DESIGN
Propeller Wall Fan shall be heavy duty axial type oriented for exhaust or supply with accessories as indicated on fan schedule. Drive shall be belt drive. Fan shall be rated and tested per AMCA standards for air and sound performance.

2.2. CONSTRUCTION

2.2.1. Panel to be constructed of G90 galvanized steel –16ga for 20” and 12ga for 24” to 60” with spun one-piece venturi and pre-punched mounting holes. Motor support structure to be welded schedule 40 galvanized pipe. Bolting is not acceptable. Propeller to be die-formed G90 galvanized steel 16ga minimum blades bolted to epoxy coated hub and keyed to the shaft. Propeller to be statically and dynamically balanced at the factory prior to shipping.

2.2.2. Drive sheave to be a minimum 150% of driven horsepower, machined cast iron adjustable Pitch through 3 hp, keyed to both motor and fan shaft. Fan shaft to be precision turned, ground and polished steel. Belts to be non-static oil and heat resistant V-belts. Bearing to be self-aligning cast iron pillow block type with lubrication fittings. Minimum of L-50 (200,000 hr average life).

2.2.3. Motor to be open drip-proof with permanently lubricated sealed ball bearings. Nationally recognized brand and locally serviceable. Minimum 1/4 hp.

2.2.4. Fan to be completely assembled at factory and tested prior to shipment.

2.2.5. Model 7300 Belt Drive - Level 1 Axial Wall Fan Guide Specification cont.

2.3. ACCESSORIES (Select as required)

2.3.1. Wall Housing to be heavy gauge G90 galvanized steel of standard length to accommodate selected accessories.

2.3.2. Automatic Backdraft Damper – Gravity for Exhaust Applications Only.

2.3.3. 115vac Motorized Damper – Power Open, Spring Close, Motor to be Totally Enclosed Model (Explosion Proof)

2.3.4. Rainhood to be G90 galvanized steel. 45 degree for exhaust application. 90 degree for supply applications. Hood to include galvanized screen guard.

2.3.5. Guard screens to be OSHA approved ½ “x 1” 16 ga galvanized. (1/2” x ½” expanded aluminum;

2.3.6. ¾” x ¾” expanded aluminum).

2.3.7. Extended lube lines to be provided to motor bearings.

2.3.8. NEMA__ Disconnect Switch to be provided.

2.3.9. Fan panel (housing; damper; rainhood) to be air dry epoxy coated. Color to match color chip.

2.3.10. Fan panel (housing; damper; rainhood) to be painted with polyester resin. Color to match color chip.

2.3.11. Fan panel (housing; damper; rainhood) to have phenolic coating.

2.3.12. UL /CUL –705 Listing Label (cannot be field applied).

3.1. INSPECTION
Examine Wall Surface prior to installation. Check that support structure is in place before installing housing/collar. Make sure surface is clear of debris to ensure proper adhesion of caulking material between vent housing/collar and surface where required.

3.2. INSTALLATION AND ERECTION

3.2.1. Install Model 7300 Belt Drive- Level 1 Propeller Wall Fan and Accessories in conformance with approved drawings and MOFFITT specifications.

3.2.2. Any necessary hardware and caulking for ventilator shall be included with units

3.2.3. Any additional material to be provided by installing contractor.

3.3. DAMAGED MATERIAL

3.4. Repair or replace all damaged material.

PF7300 Belt Drive - Level 2 Axial Wall Fan Guide Specification

1.1. **DESCRIPTION**
Furnish and Install Model 7300 Belt Drive-Level 2 Propeller Wall Fan and accessories as indicated on drawings.

1.2. QUALITY ASSURANCE
MOFFITT (Jacksonville, FL, 1 800-474-3267) Products establish the standard of quality required. Manufacturer and erector shall demonstrate a minimum of five (5) years of related industry experience.

1.3. SUBSTITUTIONS
No substitutions will be considered unless written request for approval has been submitted by the bidder and has been received by the designer at least ten (10) days prior to bid date. Any proposed substitutions should meet the standards set by the specification.

1.4. SUBMITTALS
Furnish approval drawings prior to fabrication; and erection drawings prior to shipment showing all erection procedures and accessories required for the specified product.

2.1. DESIGN
Propeller Wall Fan shall be heavy duty axial type oriented for exhaust or supply with accessories as indicated on fan schedule. Drive shall be belt drive. Fan shall be rated and tested per AMCA standards for air and sound performance.

2.2. CONSTRUCTION
- 2.2.1. Panel to be constructed of G90 galvanized steel –16ga for 20” and 12ga for 24” to 60” with spun one-piece venturi and pre-punched mounting holes. Motor and bearing plate to be a minimum of 10ga G90 galvanized steel. Welded panel end support frame. Bolting not acceptable.
- 2.2.2. Propeller to be 6 bladed die-formed G90 galvanized steel 16ga minimum blades bolted to a structural steel hub and keyed to the fan shaft. Multiple blade laminations to be incorporated for 3 hp motors and larger. Propeller to be statically and dynamically balanced at the factory prior to shipping. Drive sheave to be a minimum 150% of driven horsepower, machined cast iron adjustable pitch through 3 hp, keyed to both motor and fan shaft. Fan shaft to be precision turned, ground and polished steel. Belts to be non-static oil and heat resistant V-belts.
- 2.2.3. Bearing to be self-aligning cast iron pillow block type with lubrication fittings. Minimum of L-50 (200,000 hr average life). Motor to be open drip-proof with permanently lubricated sealed ball bearings. Nationally recognized brand and locally serviceable. Minimum 1/4 hp.
- 2.2.4. Fan to be completely assembled at factory and tested prior to shipment.

2.3. ACCESSORIES (Select as required)
- 2.3.1. Wall Housing to be heavy gauge G90 galvanized steel of standard length to accommodate selected accessories.
- 2.3.2. Automatic Back draft Damper – Gravity for Exhaust Applications Only.
- 2.3.3. 115vac Motorized Damper – Power Open, Spring Close
- 2.3.4. Motor to be Totally Enclosed Model (Explosion Proof; 2 Speed)
- 2.3.5. Rain hood to be G90 galvanized steel. 45° for exhaust application, 90° for supply applications. Hood to include Galvanized screen guard.
- 2.3.6. Guard screens to be OSHA approved ½ “x 1” 16 ga galvanized. (1/2” x ½” expanded aluminum; ¾” x ¾” expanded aluminum).
- 2.3.7. Extended lube lines to be provided to motor bearings.
- 2.3.8. NEMA__ Disconnect Switch to be provided.
- 2.3.9. Aluminum Construction to be provided for fan, housing, damper, hood and guards.
- 2.3.10. Fan panel (housing; damper; rain hood) to be air dry epoxy coated. Color to match color chip.
- 2.3.11. Fan panel (housing; damper; rain hood) to be painted with polyester resin. Color to match color chip.
- 2.3.12. Fan panel (housing; damper; rain hood) to have phenolic coating.
- 2.3.13. UL /CUL –705 Listing Label (cannot be field applied).

3.1. INSPECTION

3.2. Examine Wall Surface prior to installation. Check that support structure is in place before installing housing/collar. Make sure surface is clear of debris to ensure proper adhesion of caulking material between vent housing/collar and surface where required.

3.3. INSTALLATION AND ERECTION
- 3.3.1. Install Model 7300 Belt Drive- Level 2 Propeller Wall Fan and Accessories in conformance with approved drawings and MOFFITT specifications.
- 3.3.2. Any necessary hardware and caulking for ventilator shall be included with units.
- 3.3.3. Any additional material to be provided by installing contractor.

3.4. DAMAGED MATERIAL
Repair or replace all damaged material.

PF7300 Belt Drive - Level 3 Axial Wall Fan Guide Specification

1.1. **DESCRIPTION**
Furnish and Install Model 7300 Belt Drive-Level 3 Propeller Wall Fan and accessories as indicated on drawings.

1.2. QUALITY ASSURANCE
MOFFITT (Jacksonville, FL, 1 800-474-3267) Products establish the standard of quality required. Manufacturer and erector shall demonstrate a minimum of five (5) years of related industry experience.

1.3. SUBSTITUTION
No substitutions will be considered unless written request for approval has been submitted by the bidder and has been received by the designer at least ten (10) days prior to bid date. Any proposed substitutions should meet the standards set by the specification.

1.4. SUBMITTALS
Furnish approval drawings prior to fabrication; and erection drawings prior to shipment showing all erection procedures and accessories required for the specified product.

2.1. DESIGN
Propeller Wall Fan shall be heavy duty axial type oriented for exhaust or supply with accessories as indicated on fan schedule. Drive shall be belt drive. Fan shall be rated and tested per AMCA standards for air and sound performance.

2.2. CONSTRUCTION
- 2.2.1. Panel to be constructed of G90 galvanized steel with spun one-piece venturi and pre-punched mounting holes. Motor and bearing plate to be a minimum of 10ga G90 galvanized steel structurally secured to minimum 1 ¼" schedule 40 gal steel pipe by means of 12ga galvanized steel pipe brackets. Welded panel end support frame. Bolting not acceptable.
- 2.2.2. Propeller to be 6 bladed die-formed G90 galvanized steel 16ga minimum blades bolted to a structural steel hub and keyed to the fan shaft. Multiple blade laminations to be incorporated for 3 hp motors and larger. Propeller to be statically and dynamically balanced at the factory prior to shipping.
- 2.2.3. Drive sheave to be a minimum 150% of driven horsepower, machined cast iron adjustable pitch through 3 hp, keyed to both motor and fan shaft. Fan shaft to be precision turned, ground and polished steel. Belts to be non-static oil and heat resistant V-belts.
- 2.2.4. Bearing to be self-aligning cast iron pillow block type with lubrication fittings. Minimum of L-50 (200,000 hr average life). Motor to be open drip-proof with permanently lubricated sealed ball bearings. Nationally recognized brand and locally serviceable. Minimum 1/4 hp.
- 2.2.5. Fan to be completely assembled at factory and tested prior to shipment.

2.3. ACCESSORIES (Select as required)
- 2.3.1. Wall Housing to be heavy gauge G90 galvanized steel of standard length to accommodate selected accessories.
- 2.3.2. Automatic Back draft Damper – Gravity for Exhaust Applications Only.
- 2.3.3. 115vac Motorized Damper – Power Open, Spring Close
- 2.3.4. Motor to be Totally Enclosed Model (Explosion Proof; 2 Speed)
- 2.3.5. Rain hood to be G90 galvanized steel. 45° for exhaust application, 90° for supply applications. Hood to include galvanized screen guard.
- 2.3.6. Guard screens to be OSHA approved ½ "x 1" 16 ga galvanized. (1/2" x ½" expanded aluminum; ¾" x ¾" expanded aluminum).
- 2.3.7. Extended lube lines to be provided to motor bearings.
- 2.3.8. NEMA__ Disconnect Switch to be provided.
- 2.3.9. Aluminum Construction to be provided for fan, housing, damper, hood and guards.
- 2.3.10. Fan panel (housing; damper; rain hood) to be air dry epoxy coated. Color to match color chip.
- 2.3.11. Fan panel (housing; damper; rain hood) to be painted with polyester resin. Color to matchcolor chip.
- 2.3.12. Fan panel (housing; damper; rain hood) to have phenolic coating.
- 2.3.13. UL /CUL –705 Listing Label (cannot be field applied).

3.1. INSPECTION
Examine Wall Surface prior to installation. Check that support structure is in place before installing housing/collar. Make sure surface is clear of debris to ensure proper adhesion of caulking material between vent housing/collar and surface where required.

3.2. INSTALLATION AND ERECTION
- 3.2.1. Install Model 7300 Belt Drive- Level 3 Propeller Wall Fan and Accessories in conformance with approved drawings and MOFFITT specifications.
- 3.2.2. Any necessary hardware and caulking for ventilator shall be included with units.
- 3.2.3. Any additional material to be provided by installing contractor.

3.3. DAMAGED MATERIAL
Repair or replace all damaged material.